Aug. 10, 1943. J. F. THOMPSON 2,326,414

STORAGE CONTAINER

Filed Jan. 12, 1940

Fig. 1.

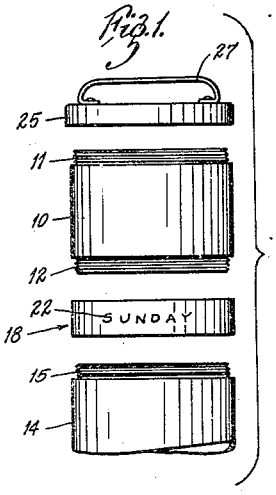

Fig. 3.

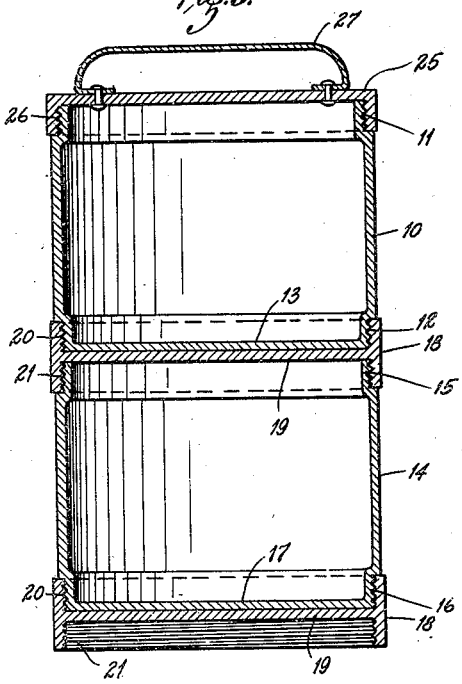

Fig. 2.

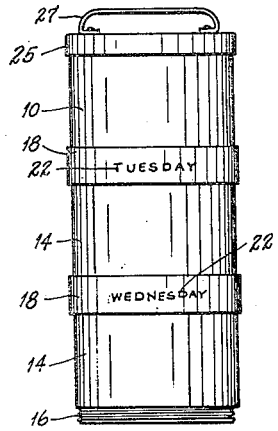

Fig. 8.

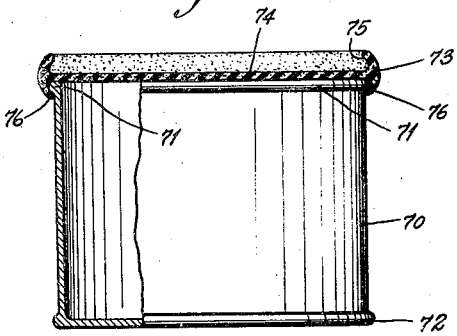

Fig. 4.

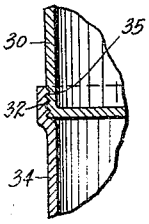

Fig. 5.

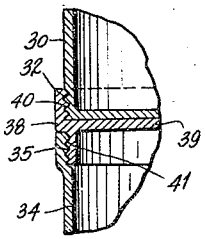

Fig. 6.

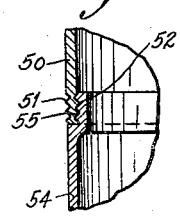

Fig. 7.

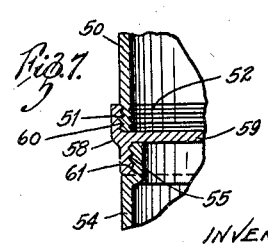

INVENTOR
JAMES F. THOMPSON

BY Lawrence G. Kingsland
ATTORNEY.