Dec. 17, 1957 C. E. FREESE 2,816,514

VIBRATORY PUMP

Filed Sept. 17, 1954

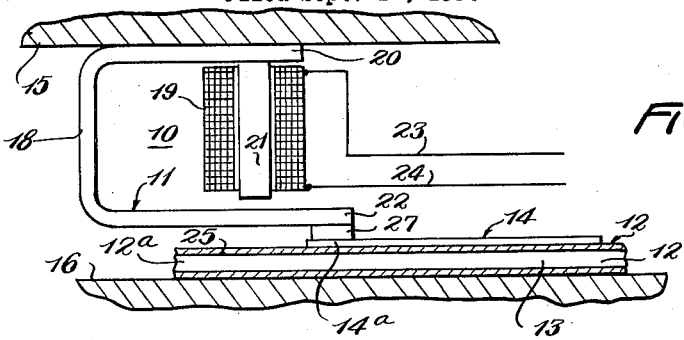

FIG. 1

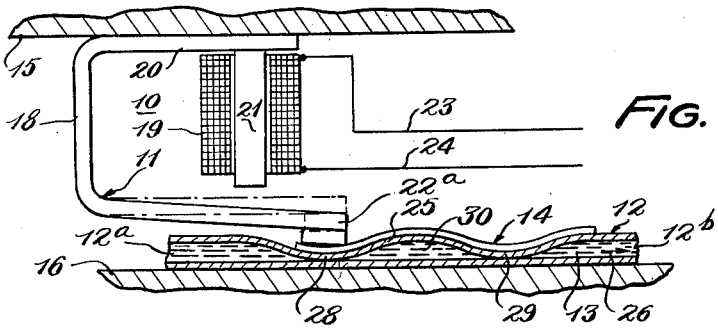

FIG. 2

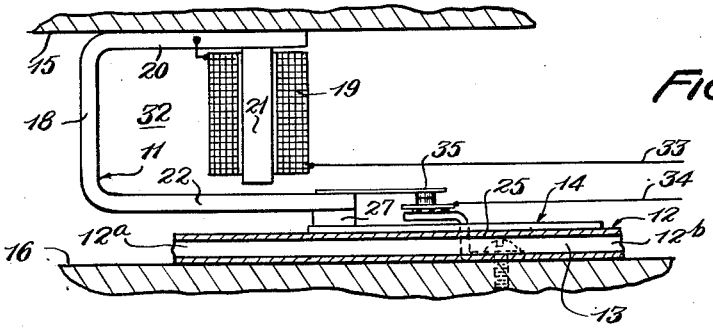

FIG. 3

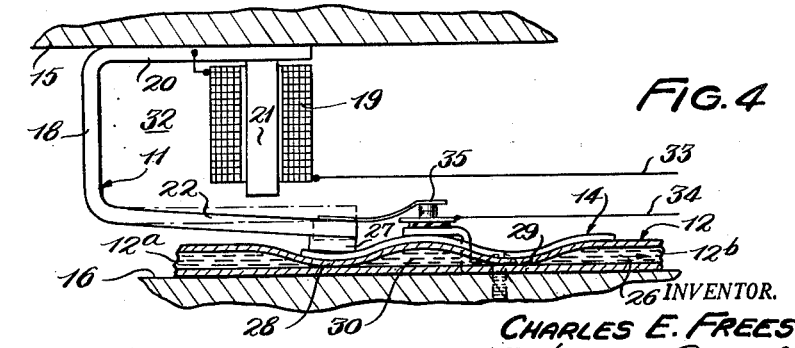

FIG. 4

INVENTOR.
CHARLES E. FREESE
BY Hudson, Boughton, Williams, David & Hoffmann
ATTORNEYS