US009411214B2

(12) **United States Patent**
**Roberts et al.**

(10) **Patent No.: US 9,411,214 B2**
(45) **Date of Patent: Aug. 9, 2016**

(54) **COUNTERBALANCED MONOPOD JIB FOR CAMERAS**

(71) Applicant: **Disney Enterprises, Inc.**, Burbank, CA (US)

(72) Inventors: **Vincent H. Roberts**, Thousand Oaks, CA (US); **Kenneth D. Salter**, Glendale, CA (US)

(73) Assignee: **Disney Enterprises, Inc.**, Burbank, CA (US)

( * ) Notice: Subject to any disclaimer, the term of this patent is extended or adjusted under 35 U.S.C. 154(b) by 88 days.

(21) Appl. No.: **13/843,878**

(22) Filed: **Mar. 15, 2013**

(65) **Prior Publication Data**

US 2014/0211975 A1 Jul. 31, 2014

**Related U.S. Application Data**

(60) Provisional application No. 61/758,213, filed on Jan. 29, 2013.

(51) **Int. Cl.**

| | |
|---|---|
| ***G03B 17/56*** | (2006.01) |
| ***F16M 11/04*** | (2006.01) |
| ***F16M 13/04*** | (2006.01) |
| ***F16M 11/14*** | (2006.01) |
| ***F16M 11/20*** | (2006.01) |

(52) **U.S. Cl.**

CPC ..... ***G03B 17/561*** (2013.01); ***F16M 11/04*** (2013.01); ***F16M 11/14*** (2013.01); ***F16M 11/2078*** (2013.01); ***F16M 13/04*** (2013.01); *F16M 2200/041* (2013.01)

(58) **Field of Classification Search**

CPC ..... F16M 13/00–13/027; F16M 11/00; F16M 11/04; F16M 11/06; F16M 11/08; F16M 11/123; F16M 11/125; F16M 11/205; E04H 12/22; E04H 12/2253; E04H 12/2284; G03B 17/56; G03B 17/561; G03B 17/563; G03B 17/565; G03B 17/566; G03B 17/568; G03B 17/58; H04N 5/23248; B66F 11/048

USPC ..... 348/373–376

See application file for complete search history.

(56) **References Cited**

U.S. PATENT DOCUMENTS

| | | | | | |
|---|---|---|---|---|---|
| 4,017,168 | A * | 4/1977 | Brown | F16M 11/04 | 248/586 |
| 4,030,114 | A * | 6/1977 | Telfer | F16M 11/00 | 248/159 |
| 4,946,272 | A * | 8/1990 | Brown | F16M 13/04 | 352/243 |
| 5,098,182 | A * | 3/1992 | Brown | F16M 13/04 | 224/908 |
| 5,235,227 | A * | 8/1993 | Fazekas | F16C 27/066 | 310/51 |
| 5,243,370 | A * | 9/1993 | Slater | F16M 13/04 | 248/123.2 |
| 5,454,042 | A * | 9/1995 | Drever | F16M 13/04 | 381/361 |
| 6,550,734 | B1 * | 4/2003 | Spadea | F16M 11/04 | 248/274.1 |
| 7,090,416 | B2 * | 8/2006 | Mootz | F16M 11/04 | 248/187.1 |
| 7,625,090 | B2 * | 12/2009 | Brown | F16M 13/04 | 248/187.1 |

(Continued)

*Primary Examiner* — Pritham Prabhakher

(74) *Attorney, Agent, or Firm* — Ference & Associates LLC

(57) **ABSTRACT**

One embodiment provides a counterbalancing arrangement, including: a pin arrangement attached to a monopole; the pin arrangement rotating with respect to the monopole such that roll movement of the monopole imparts yaw movement to the pin arrangement; the pin arrangement having a gimbal; a camera mounting platform having an upper and lower surface; the gimbal connecting to the lower surface of the camera mounting platform; the gimbal having a yaw degree of freedom locked with respect to the camera mounting platform; and a counterbalancing arm attached to the camera mounting platform. Other aspects are described and claimed.
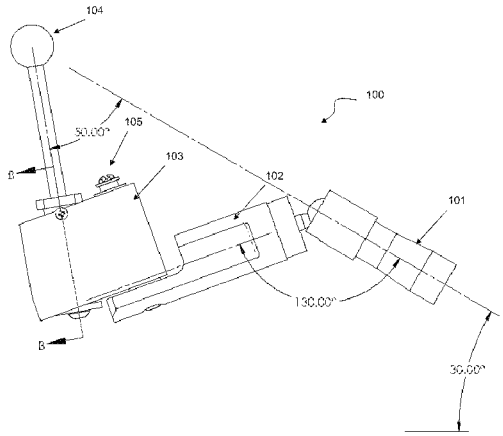
**11 Claims, 9 Drawing Sheets**