US009410714B2

(12) **United States Patent**
Tsuji

(10) **Patent No.: US 9,410,714 B2**
(45) **Date of Patent: Aug. 9, 2016**

(54) **CONTROLLER AND AIR CONDITIONER**

(75) Inventor: **Kaichi Tsuji**, Kusatsu (JP)

(73) Assignee: **Daikin Industries, Ltd.**, Osaka-shi (JP)

(*) Notice: Subject to any disclaimer, the term of this patent is extended or adjusted under 35 U.S.C. 154(b) by 1105 days.

(21) Appl. No.: **13/504,814**

(22) PCT Filed: **Oct. 29, 2010**

(86) PCT No.: **PCT/JP2010/069348**

§ 371 (c)(1),
(2), (4) Date: **Apr. 27, 2012**

(87) PCT Pub. No.: **WO2011/052743**

PCT Pub. Date: **May 5, 2011**

(65) **Prior Publication Data**

US 2012/0220212 A1 Aug. 30, 2012

(30) **Foreign Application Priority Data**

Oct. 30, 2009 (JP) 2009-251457

(51) **Int. Cl.**
F24F 13/10 (2006.01)
F24F 11/00 (2006.01)
F24F 1/00 (2011.01)

(52) **U.S. Cl.**
CPC ***F24F 11/0086*** (2013.01); *F24F 11/0078* (2013.01); *F24F 2001/0037* (2013.01); *F24F 2011/0091* (2013.01)

(58) **Field of Classification Search**
CPC F24F 11/0078; F24F 2001/0048; F24F 1/0007; F24F 11/0086; F24F 2011/0091; F24F 2001/0037
USPC 454/256, 292, 333
See application file for complete search history.

(56) **References Cited**

U.S. PATENT DOCUMENTS

3,166,000	A	*	1/1965	Taylor	454/256
3,347,987	A		10/1967	Chaloupka	
5,072,878	A	*	12/1991	Aoki et al.	236/38
5,097,672	A	*	3/1992	Takenaka et al.	62/186
5,180,333	A	*	1/1993	Shyu	454/319
5,331,825	A	*	7/1994	Kim	62/180
5,660,588	A	*	8/1997	Kotoh et al.	454/285
5,875,639	A	*	3/1999	Kim et al.	62/186
5,899,807	A	*	5/1999	Kim et al.	454/229
5,924,923	A	*	7/1999	Chiguchi et al.	454/256
6,334,317	B1		1/2002	Bougauchi et al.	

(Continued)

FOREIGN PATENT DOCUMENTS

JP	5-58149	A	3/1993
JP	5-126387	A	5/1993
JP	6-131334	A	5/1994
JP	7-225046	A	8/1995
JP	9-284406	A	10/1997

(Continued)

Primary Examiner — Gregory Huson
Assistant Examiner — Dana Tighe
(74) *Attorney, Agent, or Firm* — Birch, Stewart, Kolasch & Birch, LLP

(57) **ABSTRACT**

A controller configured so that pieces of information relating to each outlet and each flap which are currently set can be collectively visible on the controller. A controller for an indoor unit provided with flaps having substantially the same shape, the flap being respectively disposed at the outlets and capable of individually changing the discharge directions of air-conditioning air. The controller is provided with a display section for simultaneously displaying information relating to an outlet selected out of the outlets and/or information relating to a flap selected out of the flaps.
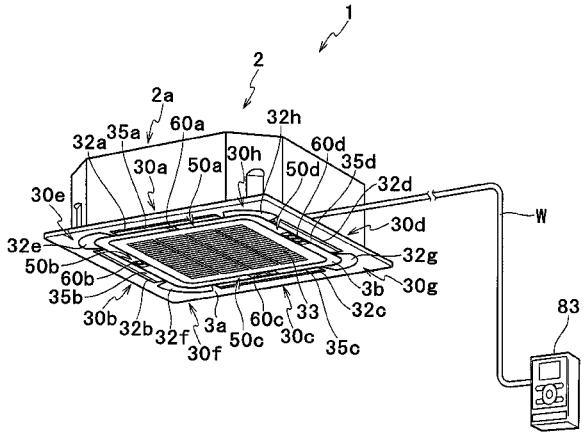
10 Claims, 22 Drawing Sheets