US009410314B1

(12) **United States Patent**
Kadosh

(10) **Patent No.: US 9,410,314 B1**
(45) **Date of Patent: Aug. 9, 2016**

(54) **MODULAR FLOODWALL CONSTRUCTION ELEMENTS**

(71) Applicant: **Yoav Kadosh**, Haifa (IL)

(72) Inventor: **Yoav Kadosh**, Haifa (IL)

(*) Notice: Subject to any disclaimer, the term of this patent is extended or adjusted under 35 U.S.C. 154(b) by 0 days.

(21) Appl. No.: **14/880,232**

(22) Filed: **Oct. 11, 2015**

(51) **Int. Cl.**

E02B 3/14	(2006.01)
E04B 2/44	(2006.01)
E04C 1/00	(2006.01)
E04B 2/02	(2006.01)
E04B 2/46	(2006.01)
E02B 8/00	(2006.01)

(52) **U.S. Cl.**
CPC ... ***E04B 2/44*** (2013.01); ***E02B 3/14*** (2013.01); ***E02B 8/00*** (2013.01); ***E04B 2/02*** (2013.01); ***E04B 2/46*** (2013.01); ***E04C 1/00*** (2013.01); *E04B 2002/0297* (2013.01)

(58) **Field of Classification Search**
CPC E04B 2/02; E04B 2/44; E04B 2/46; E04B 2002/0297; E02B 3/14; E02B 8/00; E01C 1/00
USPC ..... 52/439, 604, 606, DIG. 2; 405/284; D25/122
See application file for complete search history.

(56) **References Cited**

U.S. PATENT DOCUMENTS

834,950 A * 11/1906 Van Wie E04F 15/04 446/124
1,894,605 A * 1/1933 Wright A63H 33/04 446/122
4,083,190 A * 4/1978 Pey E02B 3/129 404/41
4,441,298 A * 4/1984 Limousin A63H 33/088 52/592.2
4,481,155 A * 11/1984 Frohwerk B01J 19/32 261/94
4,651,485 A * 3/1987 Osborne E04B 2/08 52/220.2
4,990,116 A * 2/1991 Chen A63H 33/084 446/124
5,154,542 A * 10/1992 Klenert E02D 17/18 405/284
5,273,477 A * 12/1993 Adams, Jr. A63H 33/08 446/108
5,803,660 A * 9/1998 Warren F01B 1/12 119/221
8,567,149 B2 * 10/2013 Kuzmin A63H 33/08 52/592.1

FOREIGN PATENT DOCUMENTS

AU 496022 * 8/1977 ..... E04C 1/10

* cited by examiner

Primary Examiner — Michael Safavi
(74) *Attorney, Agent, or Firm* — Edward Langer, Adv. & Patent Attorney

(57) **ABSTRACT**

A system of modular, hollow interlocking elements which are made of tough flexible lightweight material, which can be connected in order to form a stable continuous, multi-directional structure, requiring no adhesives or other stabilizing materials and can be filled with any required filling materials such as sand or locally available filling materials for use as low shaped dams, a flood protection barrier or in any need to change the course of water or fluid. The various modular elements that make up the structure can be provided by shapes having four, five, six, seven or eight walls, all identical in function, enabling quick construction of a water flood barrier, or an acoustic insulation wall, with easy adjustment of its height, length or width.
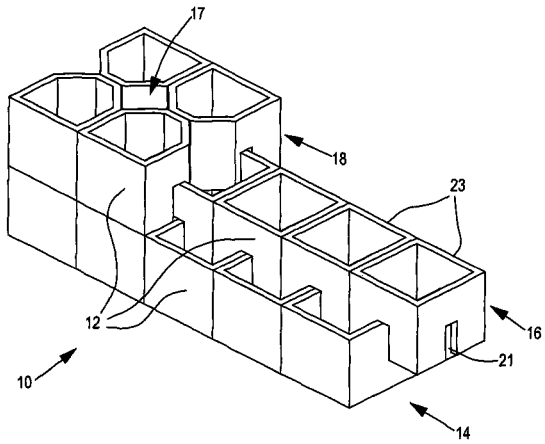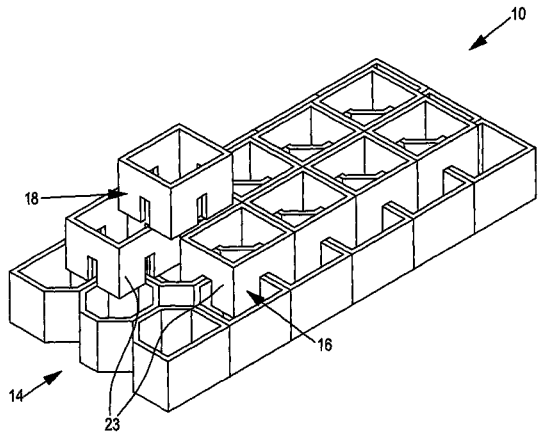
16 Claims, 8 Drawing Sheets