US009409214B2

(12) **United States Patent**
Jang et al.

(10) **Patent No.: US 9,409,214 B2**
(45) **Date of Patent: Aug. 9, 2016**

(54) **APPARATUS FOR CLEANING SUBSTRATE**

(71) Applicant: **Samsung Display Co., Ltd.**, Yongin, Gyeonggi-Do (KR)

(72) Inventors: **Euiyun Jang**, Seoul (KR); **Sang-Gu Lee**, Hwaseong-si (KR); **Yun Jang**, Hwaseong-si (KR)

(73) Assignee: **Samsung Display Co., Ltd.**, Samsung-ro, Giheung-Gu, Yongin-si, Gyeonggi-Do (KR)

(*) Notice: Subject to any disclaimer, the term of this patent is extended or adjusted under 35 U.S.C. 154(b) by 0 days.

(21) Appl. No.: **14/683,921**

(22) Filed: **Apr. 10, 2015**

(65) **Prior Publication Data**

US 2016/0096208 A1 Apr. 7, 2016

(30) **Foreign Application Priority Data**

Oct. 2, 2014 (KR) 10-2014-0133355

(51) **Int. Cl.**

B08B 5/04 (2006.01)
A47L 9/12 (2006.01)
A47L 9/20 (2006.01)

(52) **U.S. Cl.**

CPC ... ***B08B 5/04*** (2013.01); ***A47L 9/12*** (2013.01); ***A47L 9/20*** (2013.01)

(58) **Field of Classification Search**

CPC B08B 5/04; A47L 5/12; A47L 5/24; A47L 5/28; A47L 9/20; A47L 9/22; A47L 9/28

See application file for complete search history.

(56) **References Cited**

U.S. PATENT DOCUMENTS

6,990,704	B2 *	1/2006	Namba	B08B 1/04 134/902
7,931,755	B2 *	4/2011	Nishio	B08B 5/023 134/36
8,194,606	B2	6/2012	Kim et al.	
8,197,606	B2	6/2012	Watanabe et al.	
8,684,014	B2	4/2014	Amano et al.	
9,099,298	B2 *	8/2015	Dobashi	H01L 21/67051
2006/0278160	A1	12/2006	Su et al.	
2007/0240743	A1 *	10/2007	Hiroe	H01L 21/67017 134/94.1
2008/0053488	A1 *	3/2008	Uchida	H01K 21/67051 134/32

(Continued)

FOREIGN PATENT DOCUMENTS

JP	2002-244115	A	8/2002
JP	2012-163830	A	8/2012

(Continued)

Primary Examiner — Dung Van Nguyen

(74) *Attorney, Agent, or Firm* — Robert E. Bushnell, Esq.

(57) **ABSTRACT**

An apparatus for cleaning a substrate includes a suction unit generating a suction force, a suction head suctioning contamination particles remaining on the substrate that is transferred in a first direction by using the suction force, and a suction tube connected to the suction unit and the suction head so as to transfer the suction force into the suction head and providing the contamination particles suctioned by the suction head into the suction unit. The suction head may include: a plurality of suction regions arranged in a second direction crossing the first direction; and a plurality of shutters for opening and closing the suction regions. The suction regions corresponding to a width of the substrate in the second direction are opened by the shutters so as to suction the contamination particles.
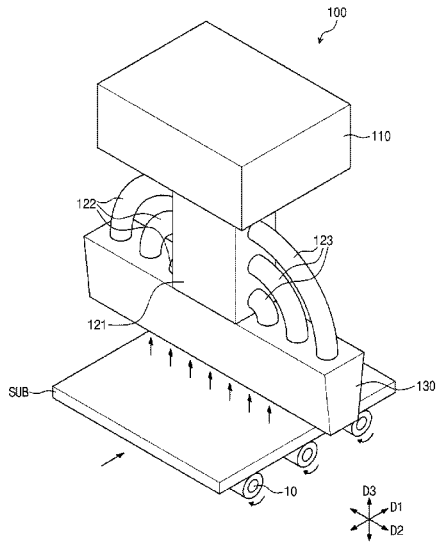
20 Claims, 5 Drawing Sheets