Nov. 2, 1937. C. BATCHELLER 2,097,613

PROCESS AND APPARATUS FOR MAKING AND COLORING CEMENT FIBER AND THE LIKE PRODUCTS

Filed July 28, 1931 9 Sheets-Sheet 3

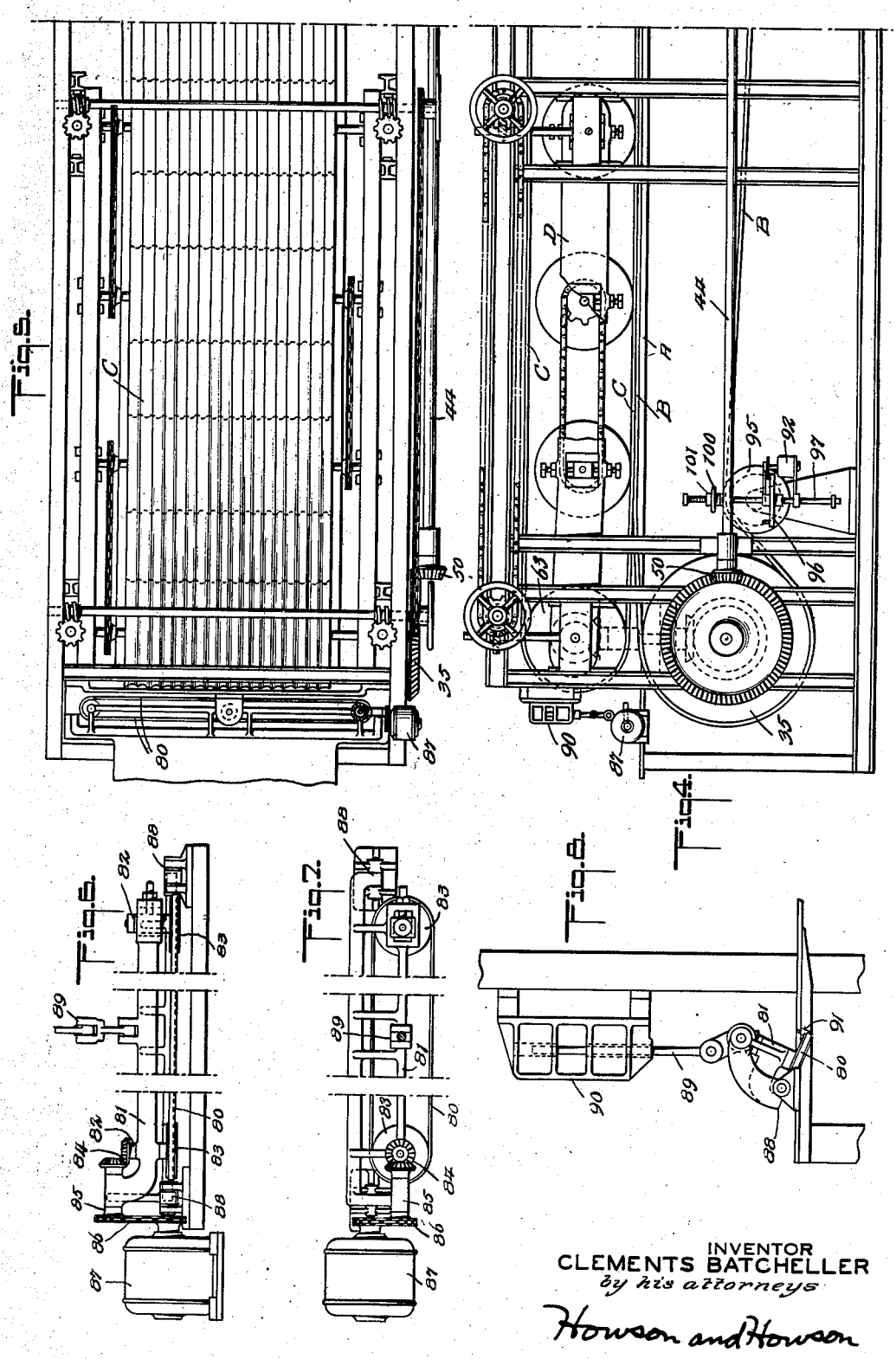

INVENTOR
CLEMENTS BATCHELLER
by his attorneys
Howson and Howson