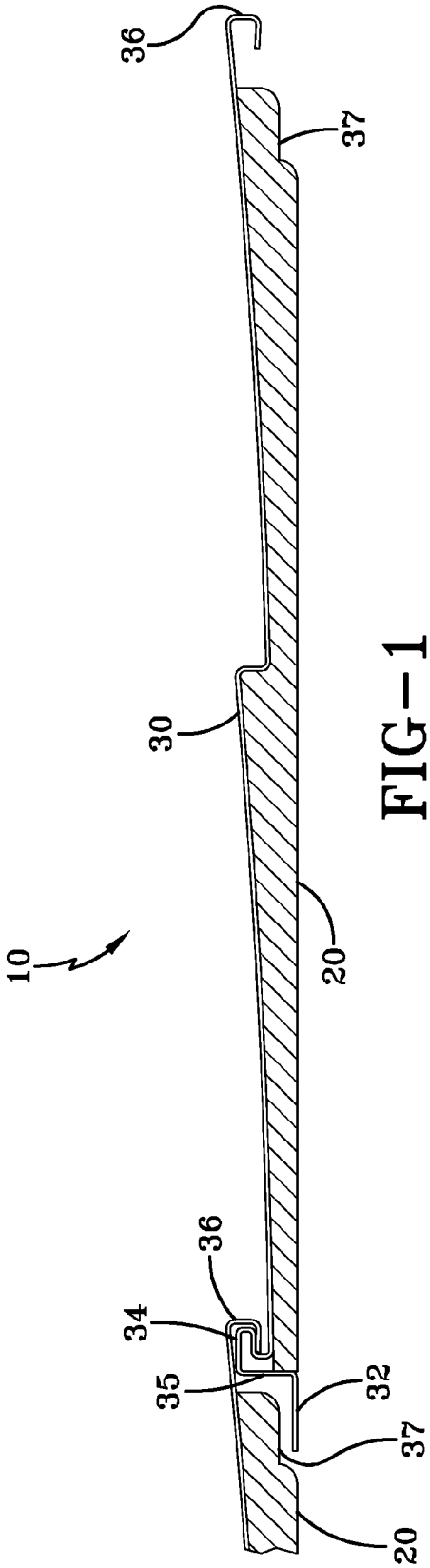

FIG–1

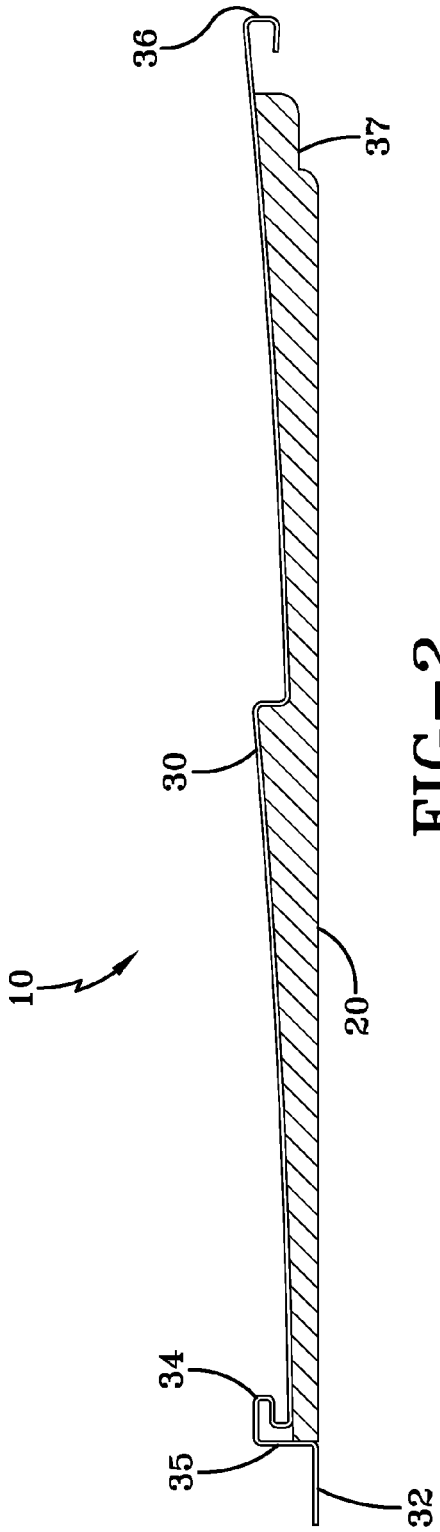

FIG–2