GAS-LIQUID CONTACT APPARATUS

Filed Dec. 26, 1967 2 Sheets-Sheet 2

Fig. 2.

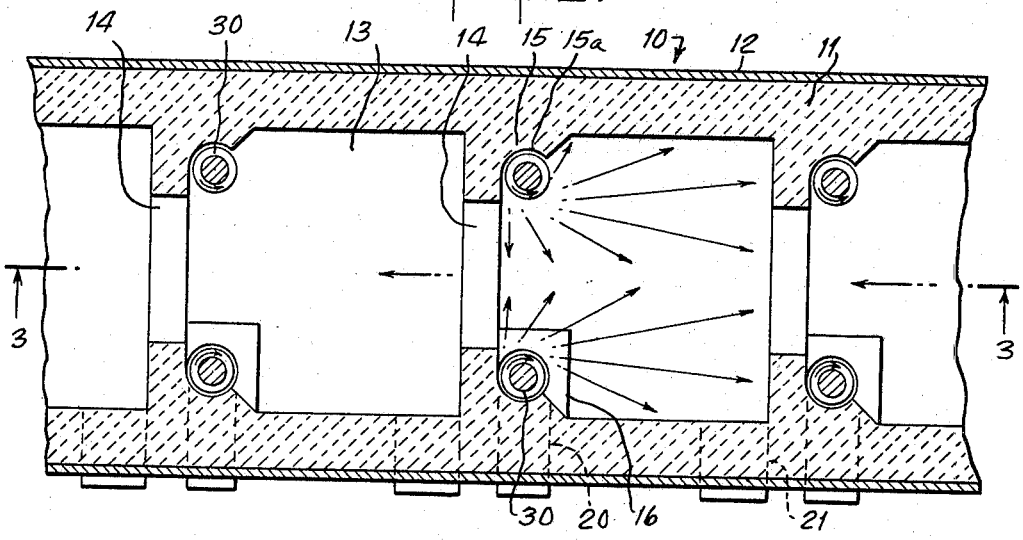

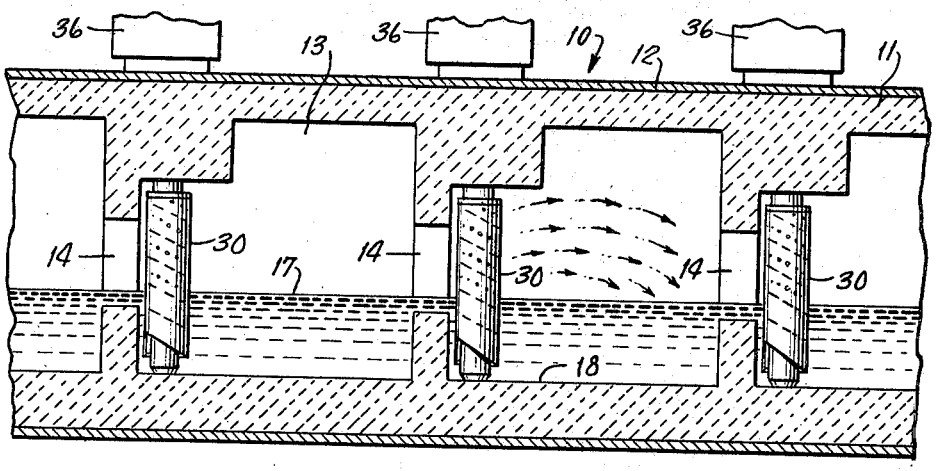

Fig. 3.

INVENTORS
MICHAEL MARENGHI
BARRY JAMES TAYLOR
BY
Robert S. Dunham
ATTORNEY