GAS-LIQUID CONTACT APPARATUS

Filed Dec. 26, 1967 2 Sheets-Sheet 1

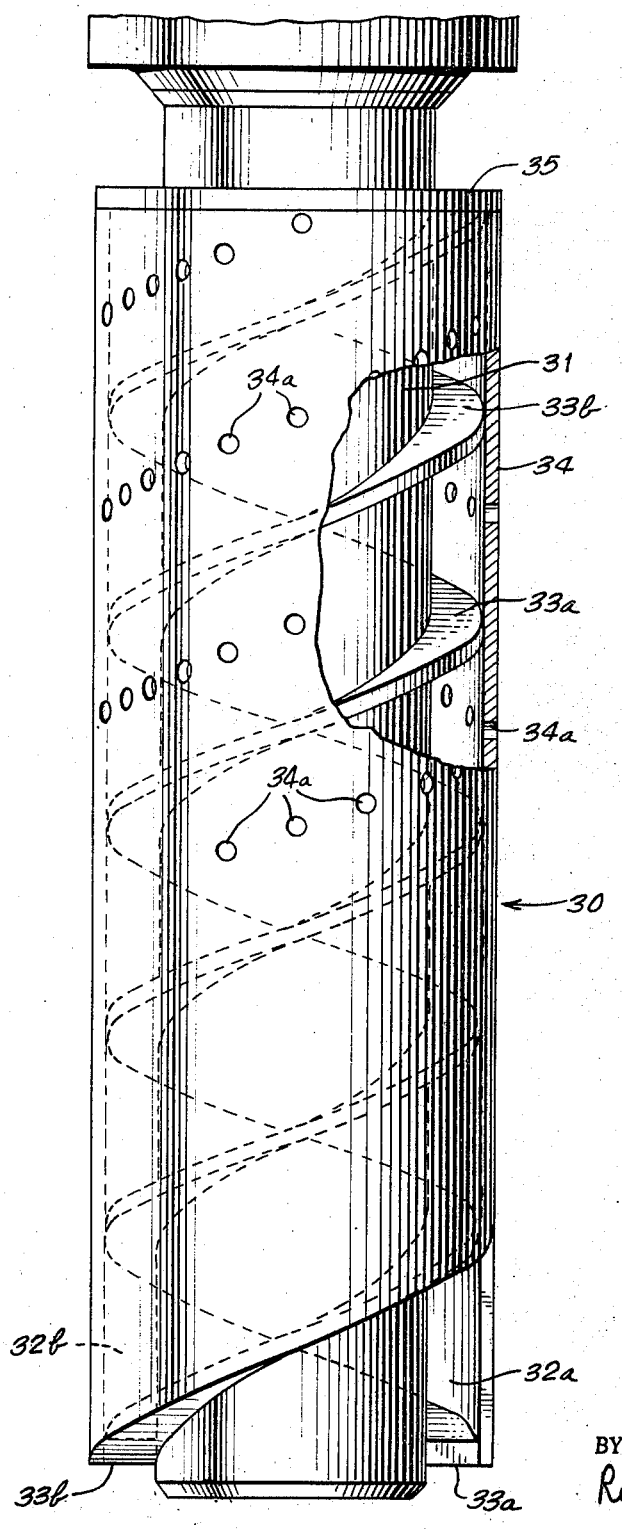

Fig. 1.

INVENTORS
MICHAEL MARENGHI
BARRY JAMES TAYLOR
BY
Robert S. Dunham
ATTORNEY