Fig. 1A

PRIOR ART

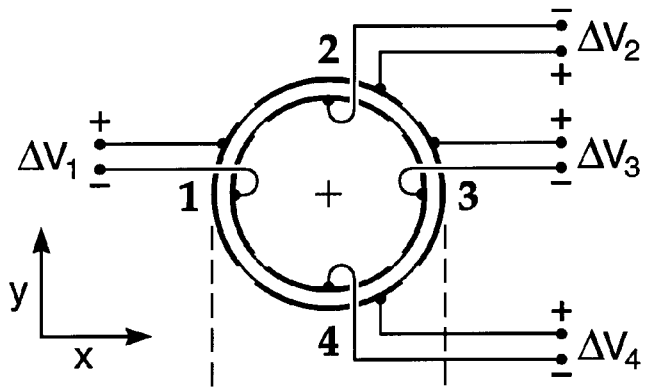

Fig. 1B

PRIOR ART

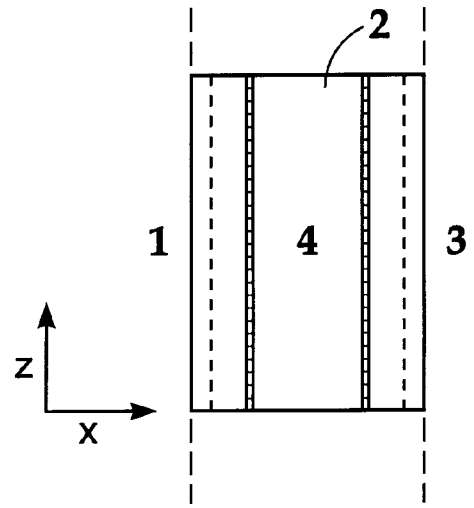

Fig. 1C
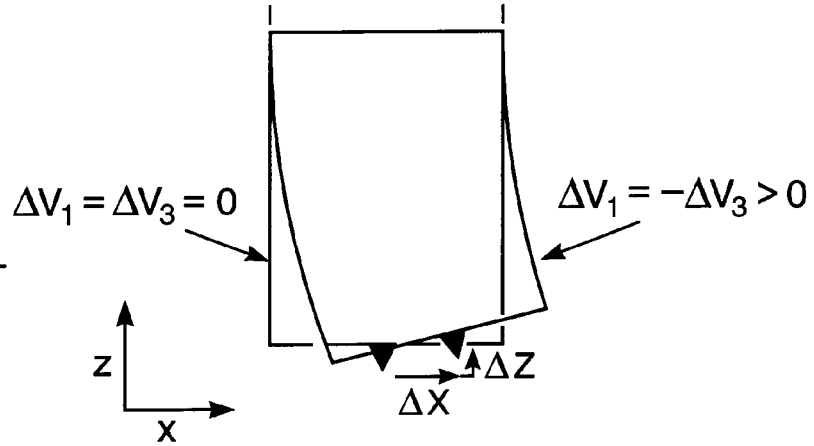
PRIOR ART