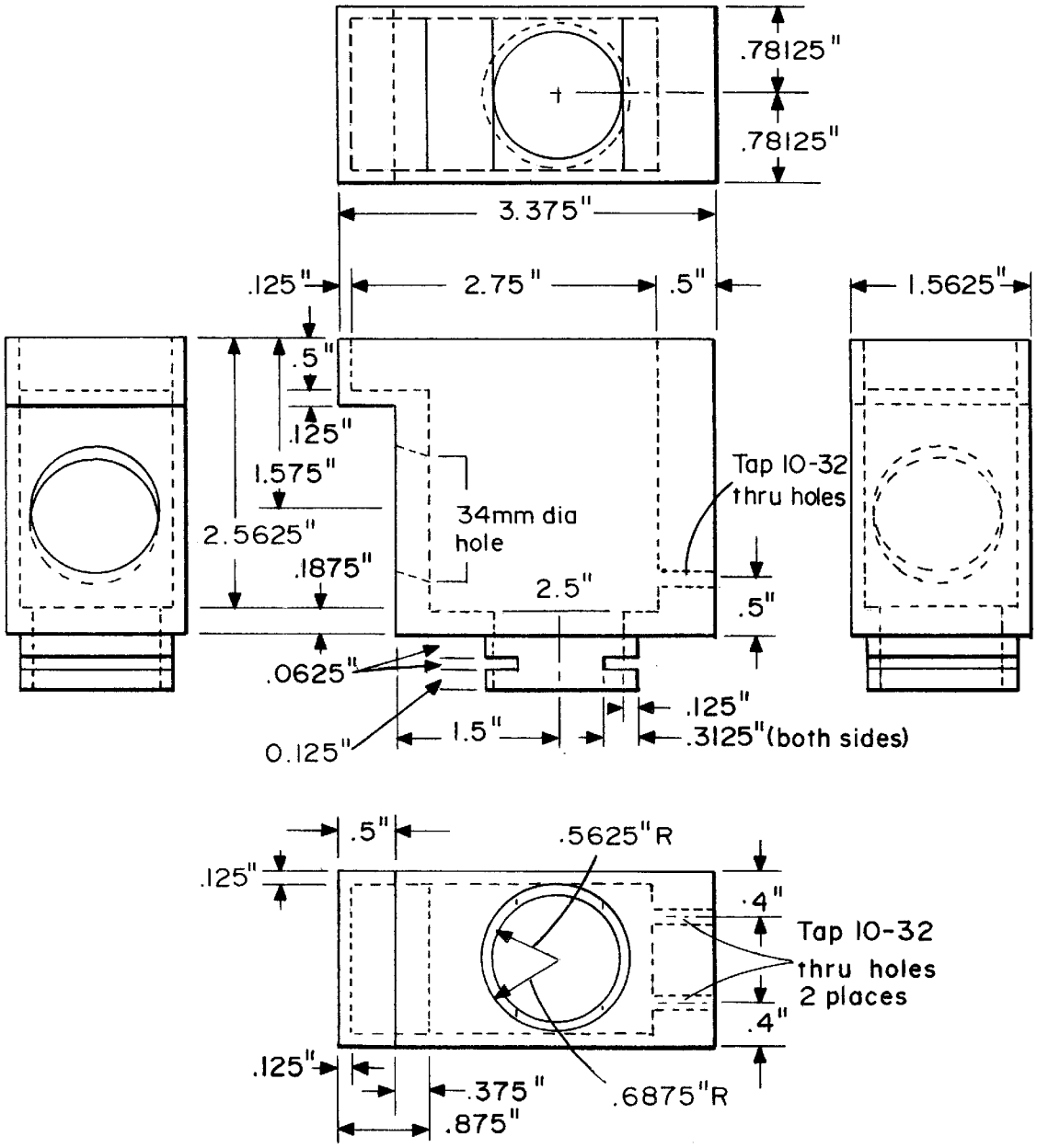
.78125"
.78125"
3.375"
.125"
2.75"
.5"
1.5625"
.5"
.125"
1.575"
2.5625"
.1875"
34mm dia
hole
Tap 10-32
thru holes
2.5"
.5"
.0625"
0.125"
1.5"
.125"
.3125"(both sides)
.5"
.5625"R
.125"
.4"
Tap 10-32
thru holes
2 places
.4"
.125"
.375"
.875"
.6875"R

FIG. 7