US006982613B2

(12) **United States Patent**
**Wu et al.**

(10) **Patent No.: US 6,982,613 B2**
(45) **Date of Patent: Jan. 3, 2006**

(54) **RADIAL POWER DIVIDER/COMBINER**

(75) Inventors: **You-Sun Wu**, Princeton Junction, NJ (US); **Mark Francis Smith**, Franklinville, NJ (US); **James Norman Remer**, Cherry Hill, NJ (US)

(73) Assignee: **L-3 Communications Corporation**, New York, NY (US)

( * ) Notice: Subject to any disclaimer, the term of this patent is extended or adjusted under 35 U.S.C. 154(b) by 35 days.

(21) Appl. No.: **10/773,947**

(22) Filed: **Feb. 6, 2004**

(65) **Prior Publication Data**

US 2005/0174194 A1 Aug. 11, 2005

(51) **Int. Cl.**
***H01P 5/12*** (2006.01)
***H03F 3/68*** (2006.01)

(52) **U.S. Cl.** ..... **333/137**; 333/136; 333/125; 333/127; 330/56; 330/124 R; 330/286; 330/295

(58) **Field of Classification Search** ..... 333/100, 333/125, 127, 128, 136, 137; 330/56, 66, 330/124 R, 286, 295
See application file for complete search history.

(56) **References Cited**

U.S. PATENT DOCUMENTS

| | | | | |
|---|---|---|---|---|
| 3,775,694 A | | 11/1973 | Quine | 330/56 |
| 3,953,702 A | | 4/1976 | Bickel | 219/761 |
| 4,097,708 A | | 6/1978 | Bickel | 219/761 |
| 4,562,409 A | * | 12/1985 | Saito et al. | 330/286 |
| 4,590,446 A | | 5/1986 | Hsu et al. | 333/125 |
| 4,599,584 A | | 7/1986 | Sasser et al. | 333/125 |
| 4,641,107 A | | 2/1987 | Kalokitis | 330/286 |
| 4,647,869 A | | 3/1987 | Kanelo et al. | 330/286 |
| 4,647,879 A | | 3/1987 | Vaddiparty | 333/127 |
| 4,684,874 A | | 8/1987 | Swift et al. | 333/125 |
| 4,926,145 A | | 5/1990 | Flam et al. | 333/125 |
| 4,933,651 A | | 6/1990 | Benahin et al. | 333/125 |
| 5,128,628 A | | 7/1992 | Marks et al. | 330/66 |
| 5,206,604 A | | 4/1993 | Vaninetti | 330/124 R |
| 5,214,394 A | | 5/1993 | Wong | 330/286 |
| 5,256,988 A | | 10/1993 | Izadian | 330/295 |
| 5,838,201 A | | 11/1998 | Sechi | 330/286 |
| 5,920,240 A | | 7/1999 | Alexanian et al. | 333/127 |
| 6,023,612 A | | 2/2000 | Harris et al. | 455/127.1 |
| 6,055,418 A | | 4/2000 | Harris et al. | 455/91 |
| 6,078,222 A | | 6/2000 | Harris et al. | 330/295 |
| 6,242,984 B1 | | 6/2001 | Stones et al. | 330/295 |
| 6,344,777 B1 | | 2/2002 | Ingram et al. | 330/295 |
| 6,420,935 B1 | | 7/2002 | Harris et al. | 330/295 |
| 6,507,243 B2 | | 1/2003 | Harris et al. | 330/129 |

OTHER PUBLICATIONS

Belohoubek, E. et al., "30-Way Radial Power Combiner for Miniature GaAs FET Power Amplifiers", *IEEE International Microwave Symposium Digest*, Jun. 1986, 515-518, vol. 86, issue 1.

(Continued)

*Primary Examiner*—Barbara Summons
(74) *Attorney, Agent, or Firm*—Woodcock Washburn LLP

(57) **ABSTRACT**

A radial power divider-combiner is disclosed. The divider-combiner includes a divider and a combiner. An input signal is provided to a transmission antenna that radiates the input signal inside the divider. Within the divider, the input signal is divided into a plurality of individual signals. The individual signals are received by receiving antennas and provided to respective amplifiers. The amplifiers amplify the respective individual signals by a desired amplification factor. The amplified individual signals are provided to a plurality of transmitting antennas within the combiner. Inside the combiner, the amplified individual signals are combined to form an output signal that is received by a receiving antenna in the combiner.
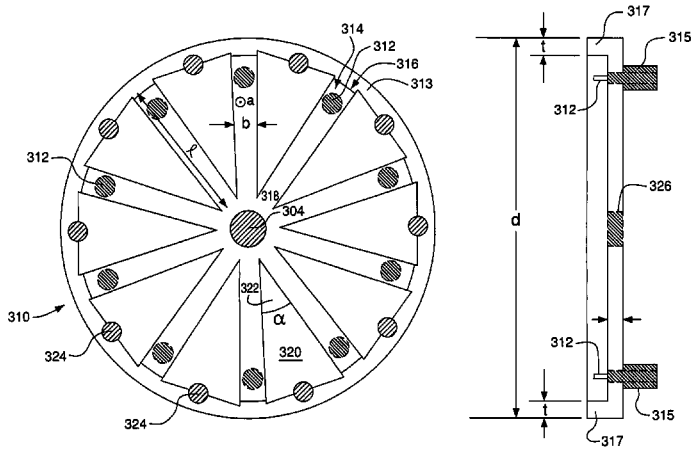
**17 Claims, 8 Drawing Sheets**