United States Patent [19]

Ikuta et al.

[11] **Patent Number: 5,074,413**

[45] **Date of Patent: Dec. 24, 1991**

[54] **CARRYING CASE**

[75] Inventors: **Tamao Ikuta**, Yokohama; **Richard Nibley**, Tokyo; **Seiichi Omino**, Hoya, all of Japan

[73] Assignee: **Canon Kabushiki Kaisha**, Tokyo, Japan

[21] Appl. No.: **544,069**

[22] Filed: **Jun. 26, 1990**

Related U.S. Application Data

[63] Continuation of Ser. No. 40,761, Apr. 20, 1987, abandoned, which is a continuation-in-part of Ser. No. 664,492, Oct. 25, 1984, abandoned.

[30] **Foreign Application Priority Data**

Oct. 31, 1983 [JP] Japan 58-202823
Oct. 31, 1983 [JP] Japan 58-202824

[51] **Int. Cl.**[5] **A45C 11/00**; A45C 13/10; A45C 13/26; B65D 85/38

[52] **U.S. Cl.** **206/320**; 190/115; 190/117; 190/118; 190/119; 400/715

[58] **Field of Search** ..... 190/18 A, 115, 111, 190/117, 119, 118; 206/305, 235, 320; 400/691, 715; 312/208, 244; D3/73; D18/2, 11, 12, 22; D14/114

[56] **References Cited**

U.S. PATENT DOCUMENTS

D. 234,545	3/1975	De Tomaso	D3/73
D. 245,479	8/1977	Malcolm	D3/73 X
D. 271,725	12/1983	Sherer	D3/73
D. 272,545	2/1984	Latino	D18/12
711,881	10/1902	Rubens	190/18 R
803,732	11/1905	Turner	190/119 X
1,246,203	11/1917	Willman	312/208 X
2,105,559	1/1938	Stelljes	190/118 X
2,453,663	11/1948	Hinson	190/100
2,596,652	5/1952	Chuilicek	312/208
2,684,135	7/1954	Cart	190/113
2,716,473	8/1955	Droutman	190/119
2,933,849	4/1960	Gaiser et al.	312/208
3,339,781	9/1967	Schurman et al.	190/18 R X
3,382,526	5/1968	Ryan et al.	16/110 R X
3,642,102	2/1972	Furniss et al.	190/118 X
3,739,886	6/1973	Kertzman	190/115 X
3,781,075	12/1973	Fresard	312/208
3,822,083	7/1974	Zeamer	312/208
3,861,556	1/1975	Barecki et al.	206/216
3,891,070	6/1975	Montanari	190/117
4,071,065	1/1978	Halbich	206/305 X
4,482,064	11/1984	Berke et al.	400/715 X

FOREIGN PATENT DOCUMENTS

1777450	10/1958	Fed. Rep. of Germany	
1457226	5/1969	Fed. Rep. of Germany	
2255296	5/1974	Fed. Rep. of Germany	150/55
90074	8/1967	France	150/55
331951	7/1930	United Kingdom	312/208
517089	1/1940	United Kingdom	190/18 R
1220661	1/1971	United Kingdom	312/208
2074948	11/1981	United Kingdom	400/715

Primary Examiner—Sue A. Weaver
Attorney, Agent, or Firm—Fitzpatrick, Cella, Harper & Scinto

[57] **ABSTRACT**

Carrying case having a grip portion which is so constructed as to hold the upper and lower lid members whereby the locked state of the carrying case is maintained during transportation by the holding force of the operator but is released at use by opening the grip portion, and of which interior is so constructed as to accommodate accessories to allow easy and secure observation of the accessories when the grip portion is opened prior to the use.
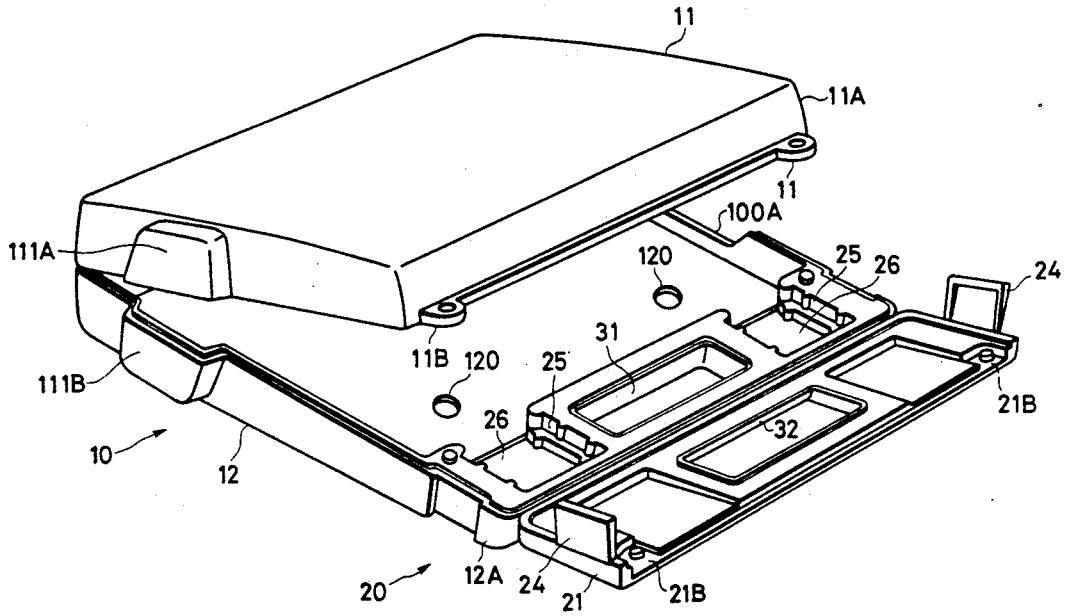
11 Claims, 6 Drawing Sheets