Feb. 10, 1942. R. M. WATERS 2,272,313

AUTOMATIC SAMPLER

Filed Jan. 10, 1939

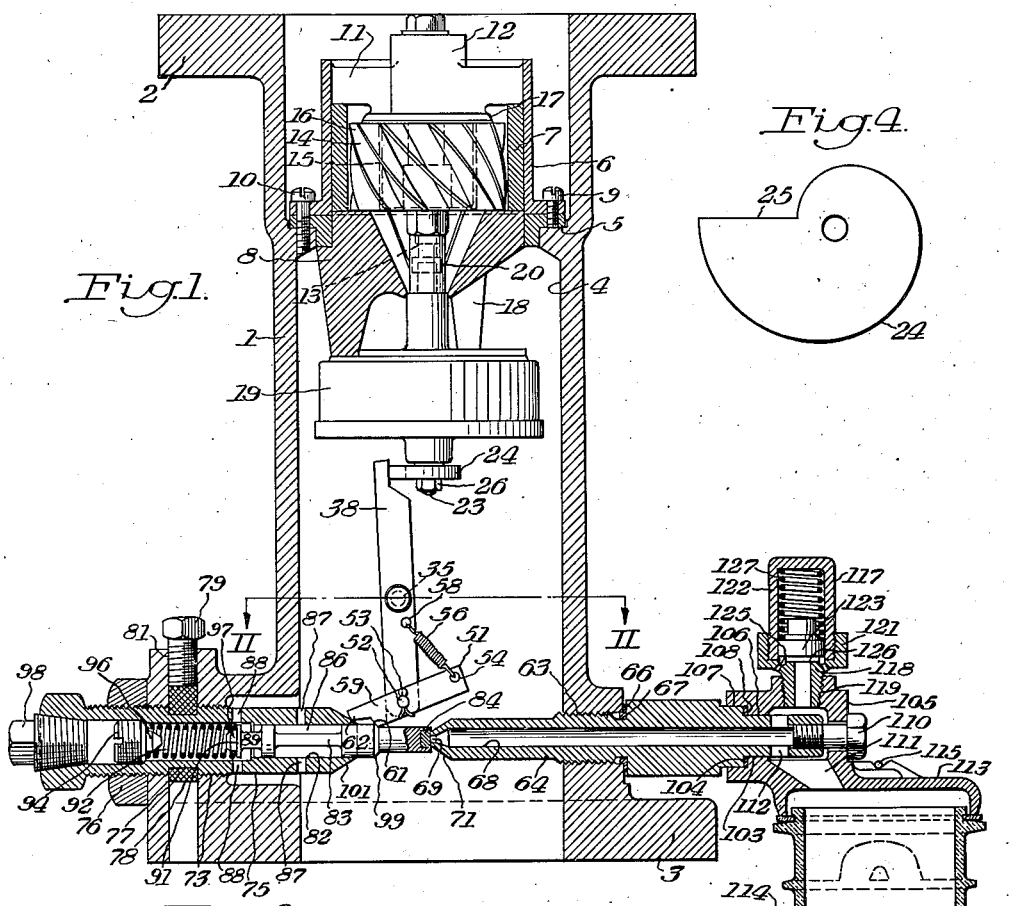

Fig. 1.

Fig. 4.

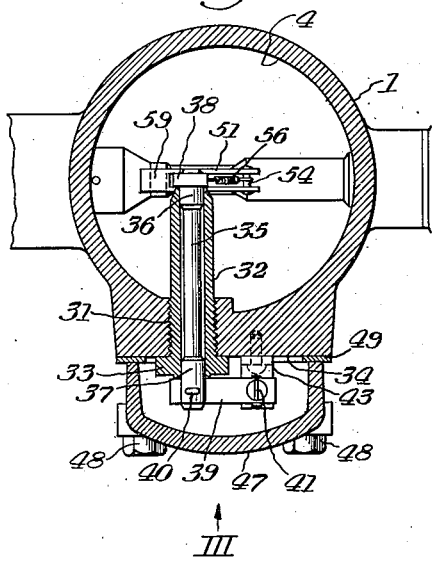

Fig. 2.

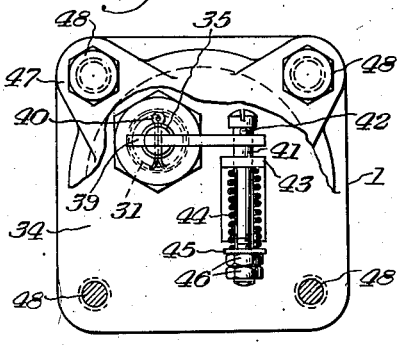

Fig. 3.

INVENTOR.
Russell M. Waters.
BY Lewis D. Konigsford
ATTORNEY.