350-362 SR
XR 3,772,013
TX 30974
SEARCH ROOM

United Sta... [11] 3,772,013
Wells SUBSTITUTE FOR MISSING XR [45] Nov. 13, 1973

[54] **PHOTOELECTROPHORETIC IMAGING PROCESS EMPLOYING ELECTRICALLY PHOTOSENSITIVE PARTICLES AND INERT PARTICLES**

[75] Inventor: **John B. Wells**, Rochester, N.Y.

[73] Assignee: **Xerox Corporation**, Stamford, Conn.

[22] Filed: **Jan. 6, 1971**

[21] Appl. No.: **104,388**

[52] **U.S. Cl.** ..... **96/1.3**, 96/1 PE, 96/1.2, 96/1.5, 204/181 PE
[51] **Int. Cl.** **G03g 13/00**, G03g 5/00
[58] **Field of Search** ..... 96/1.3, 1.2, 1 PE; 204/181 PE

[56] **References Cited**

UNITED STATES PATENTS

3,666,472	5/1972	Fill et al.	96/1.2 X
3,384,565	5/1968	Fulagin et al.	204/181
3,140,175	7/1964	Kaprelian	96/1.2 X

Primary Examiner—Norman G. Torchin
Assistant Examiner—John R. Miller, Jr.
Attorney—James J. Ralabate, David C. Petre and Richard A. Tomlin

[57] **ABSTRACT**

A photoelectrophoretic imaging system wherein an imaging suspension made up of electrically photosensitive particles and inert particles dispersed in an insulating carrier liquid are exposed to a light image and a uniform electrical field. An image is formed by particle migration in image configuration. Either the electrically photosensitive particles or the inert particles migrate to form an image depending on the polarity of the field applied.
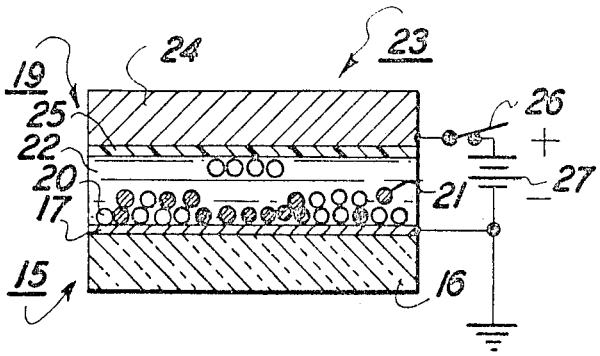
28 Claims, 9 Drawing Figures