US006457013B1

(12) **United States Patent**
Saxton et al.

(10) **Patent No.: US 6,457,013 B1**
(45) **Date of Patent: *Sep. 24, 2002**

(54) **DATA FORMATING PROPERTY MODIFIERS**

(75) Inventors: **Catherine J. Saxton**, Issaquah, WA (US); **Thomas W. Saxton**, Issaquah, WA (US); **Mark John Walker**, Redmond, WA (US)

(73) Assignee: **Microsoft Corporation**, Redmond, WA (US)

(*) Notice: This patent issued on a continued prosecution application filed under 37 CFR 1.53(d), and is subject to the twenty year patent term provisions of 35 U.S.C. 154(a)(2).

Subject to any disclaimer, the term of this patent is extended or adjusted under 35 U.S.C. 154(b) by 0 days.

(21) Appl. No.: **09/172,414**

(22) Filed: **Oct. 14, 1998**

Related U.S. Application Data

(62) Division of application No. 08/893,939, filed on Jul. 16, 1997, now Pat. No. 6,016,492.

(51) **Int. Cl.**[7] **G06F 6/00**
(52) **U.S. Cl.** **707/101**; 707/104
(58) **Field of Search** 707/1–225

(56) **References Cited**

U.S. PATENT DOCUMENTS

5,446,575 A 8/1995 Lysakowski
5,542,078 A 7/1996 Martel et al.
5,627,972 A * 5/1997 Shear 395/200.76
5,692,157 A * 11/1997 Williams 395/500
5,794,042 A * 8/1998 Terada et al. 395/701

* cited by examiner

Primary Examiner—Thomas G. Black
Assistant Examiner—John G. Mills
(74) *Attorney, Agent, or Firm*—Merchant & Gould

(57) **ABSTRACT**

Property modifiers stored on a computer-readable medium for formatting information associated with a computer file, such as an electronic document. Each property modifier includes a size field having information indicating the size of its property modifier argument and an index field having an index into a property information array. A program module can traverse a group of property modifiers by utilizing the information in the size field of the current property modifier to determine the location of the next property modifier. Formatting is applied to information of the computer file by using the index of each property modifier to access formatting information maintained in the property information array. Each property modifier can store encoded information corresponding to the type of object to receive formatting, the size of the property modifier's argument, and an index into the property information array associated with an executable computer program. Rather than pre-allocate space in the executable portion of a program module, the property modifier itself contains information embedded therein that indicates the size of the parameter of the property modifier.
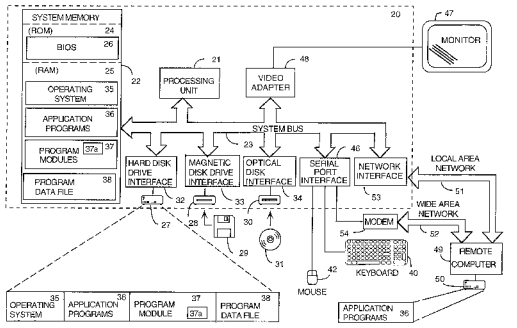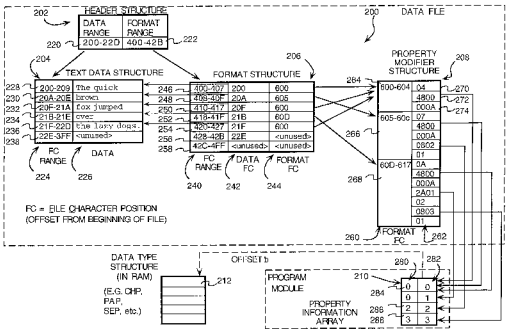
17 Claims, 6 Drawing Sheets