METHOD OF MAKING A CONTAINER

Filed Dec. 10, 1959 4 Sheets-Sheet 2

Fig.5

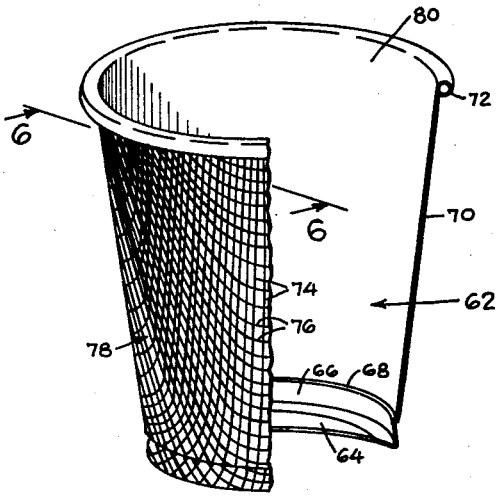

Fig.6

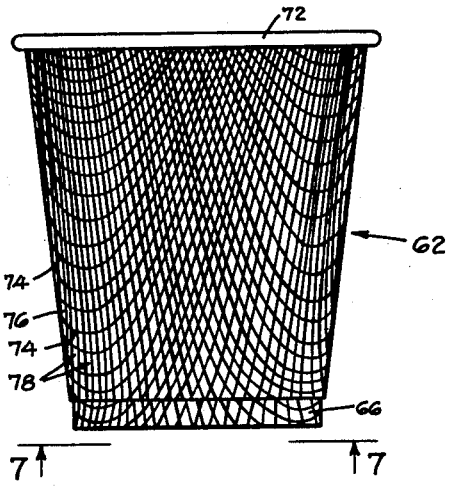

Fig.8

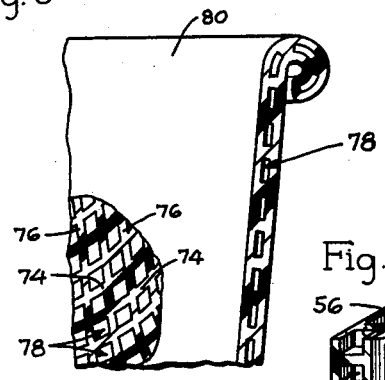

Fig.7

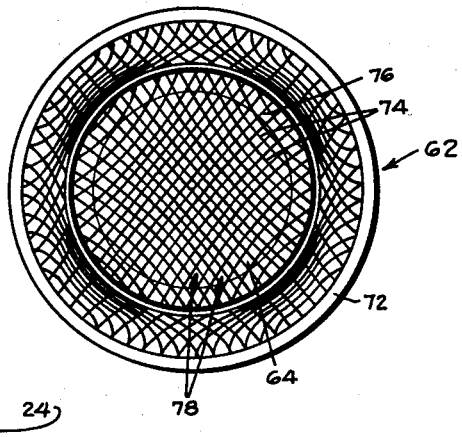

Fig.9

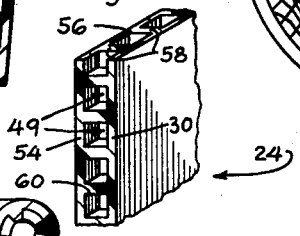

Fig.10

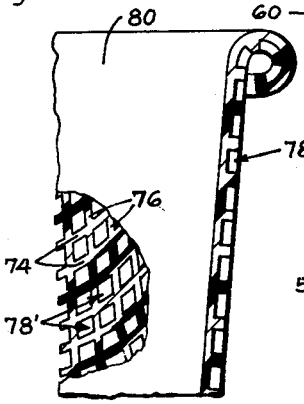

Fig.11

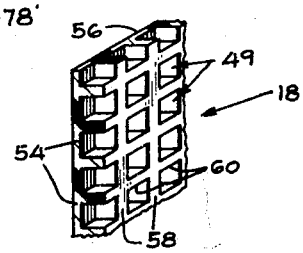

INVENTOR.
Bryant Edwards
BY
Olson & Trexler
attys.