US009637013B2

(12) **United States Patent**
Saavedra

(10) **Patent No.: US 9,637,013 B2**
(45) **Date of Patent: May 2, 2017**

(54) **APPARATUS AND METHOD FOR GENERATING POWER USING INERTIA**

(71) Applicant: **John A. Saavedra**, Irmo, SC (US)

(72) Inventor: **John A. Saavedra**, Irmo, SC (US)

(73) Assignee: **LOOK FOR THE POWER, LLC**, Irmo, SC (US)

(*) Notice: Subject to any disclaimer, the term of this patent is extended or adjusted under 35 U.S.C. 154(b) by 130 days.

(21) Appl. No.: **14/607,209**

(22) Filed: **Jan. 28, 2015**

(65) **Prior Publication Data**

US 2016/0214494 A1 Jul. 28, 2016

(51) **Int. Cl.**

F03B 13/00	(2006.01)
H02P 9/04	(2006.01)
B60L 11/18	(2006.01)
B60L 11/00	(2006.01)

(52) **U.S. Cl.**

CPC ***B60L 11/1812*** (2013.01); ***B60L 11/00*** (2013.01); *Y02T 10/7005* (2013.01)

(58) **Field of Classification Search**

CPC B60L 11/1812; B60L 11/00; H02N 11/002
USPC 290/54
See application file for complete search history.

(56) **References Cited**

U.S. PATENT DOCUMENTS

4,295,538 A * 10/1981 Lewus B60G 13/14 180/165
4,359,867 A * 11/1982 Swanson F16D 25/14 267/117
5,337,560 A * 8/1994 Abdelmalek B60G 13/14 180/65.25
5,570,286 A * 10/1996 Margolis B60G 13/14 180/165
6,054,838 A * 4/2000 Tsatsis B60K 6/12 180/165
2007/0089924 A1* 4/2007 de la Torre B60G 13/14 180/305
2008/0157537 A1* 7/2008 Richard ..... H02K 7/1876 290/1 R
2009/0071734 A1* 3/2009 Hurkett B60K 1/00 180/65.31
2009/0229902 A1* 9/2009 Stansbury, III F03G 7/08 180/165
2010/0006362 A1* 1/2010 Armstrong B60G 17/015 180/165

(Continued)

FOREIGN PATENT DOCUMENTS

GB WO 0125044 A1 * 4/2001 ..... B60G 13/14

Primary Examiner — Tulsidas C Patel
Assistant Examiner — Thomas Quigley
(74) *Attorney, Agent, or Firm* — Shumaker, Loop & Kendrick, LLP

(57) **ABSTRACT**

The invention is an apparatus for generating power using inertia of a load in a moving vehicle. The apparatus includes a vessel having a volume that is capable of an expansion and a contraction, and containing a fluid under a pressure. The fluid is released from the vessel as a force is exerted by the load of the vehicle against the vessel. The apparatus includes a reservoir, operably connected to the vessel by fluid conduit. The reservoir contains the fluid under pressure until an optimum pressure is reached at which point the reservoir releases the fluid to a power generator. The power generator then generates electrical power. Excess fluid released from the power generator then returns to the vessel.
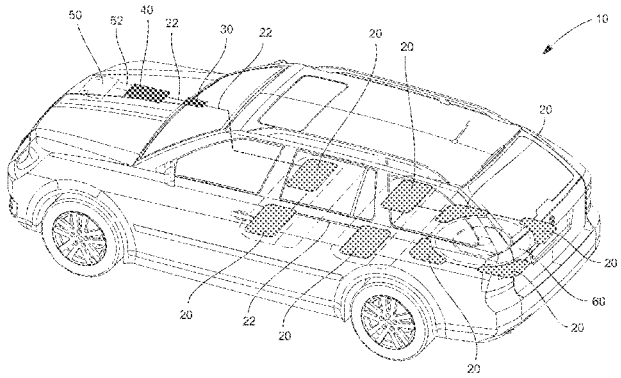
10 Claims, 5 Drawing Sheets