US009636813B2

(12) **United States Patent**
Rose et al.

(10) **Patent No.: US 9,636,813 B2**
(45) **Date of Patent: May 2, 2017**

(54) **SPAD SETTING TOOL**

(75) Inventors: **Douglas L. Rose**, Sherman, CT (US); **Alan J. Armiento**, New Rochelle, NY (US); **Robert LaBarbera**, New Rochelle, NY (US)

(73) Assignee: **BLACK & DECKER INC.**, New Britain, CT (US)

(*) Notice: Subject to any disclaimer, the term of this patent is extended or adjusted under 35 U.S.C. 154(b) by 1063 days.

(21) Appl. No.: **13/413,056**

(22) Filed: **Mar. 6, 2012**

(65) **Prior Publication Data**

US 2013/0233904 A1 Sep. 12, 2013

(51) **Int. Cl.**
B25C 1/00 (2006.01)
B25C 1/18 (2006.01)

(52) **U.S. Cl.**
CPC ***B25C 1/188*** (2013.01)

(58) **Field of Classification Search**
CPC B25C 1/188; B25C 1/184; B25C 3/002; B25C 3/006; B23Q 19/006; B21J 15/32
USPC 227/119, 149
See application file for complete search history.

(56) **References Cited**

U.S. PATENT DOCUMENTS

2,701,359 A * 2/1955 Asbury B25D 1/00 227/147
3,134,981 A * 6/1964 Demetrakopoulos ... B25C 1/001 227/112
3,171,131 A * 3/1965 De Caro B25C 1/105 227/10
3,250,451 A * 5/1966 Fulop B25C 1/18 227/10
3,306,180 A 2/1967 Asbury
4,252,260 A * 2/1981 Burton B25C 1/00 227/119
4,446,626 A 5/1984 Grender et al.
4,519,536 A * 5/1985 Steigauf B25C 1/00 227/147
5,647,525 A * 7/1997 Ishizawa B25C 1/00 227/113
7,017,790 B1 * 3/2006 Peng B25C 1/188 227/107
7,410,084 B1 8/2008 Reed
8,677,863 B2 * 3/2014 Simon B25C 1/188 227/149
8,777,080 B2 * 7/2014 Draht B21J 15/025 227/119
2008/0054043 A1 * 3/2008 Beales B25C 1/00 227/129
2011/0011912 A1 * 1/2011 Wei B25C 1/00 227/113

(Continued)

OTHER PUBLICATIONS

International Search Report and Written Opinion for PCT Application No. PCT/US2013/028971, dated Jun. 12, 2013, pp. 1-10.

Primary Examiner — Andrew M Tecco
(74) *Attorney, Agent, or Firm* — Rhonda L. Barton

(57) **ABSTRACT**

A spad setting tool includes a housing portion including a spad setting assembly receiver and a trigger. A spad setting assembly is operatively coupled to the housing at the spad setting assembly receiver. The spad setting assembly includes a spad receiving member having a spad receiving zone, and a spad retaining element. The spad retaining element is configured and disposed to retain a spad in the spad receiving zone regardless of an orientation of the spad setting assembly.
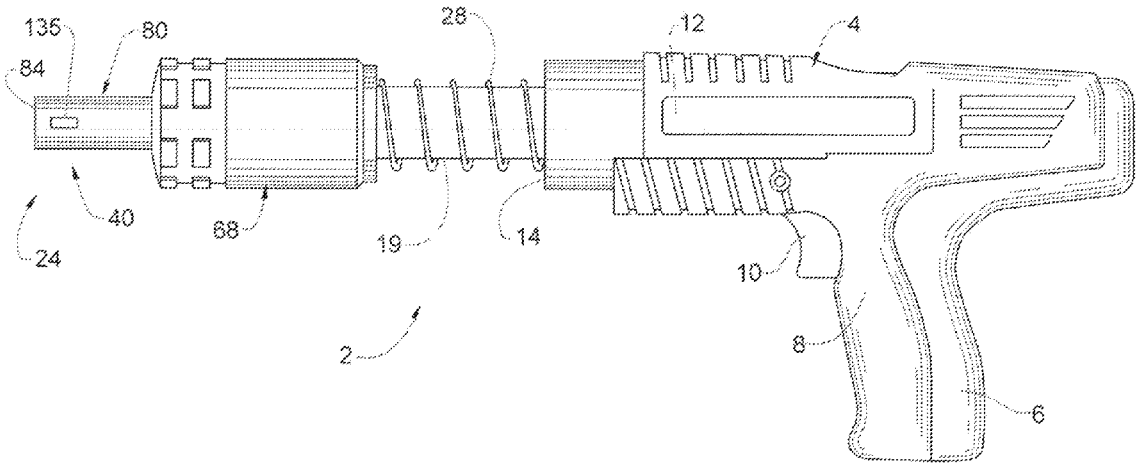
14 Claims, 4 Drawing Sheets