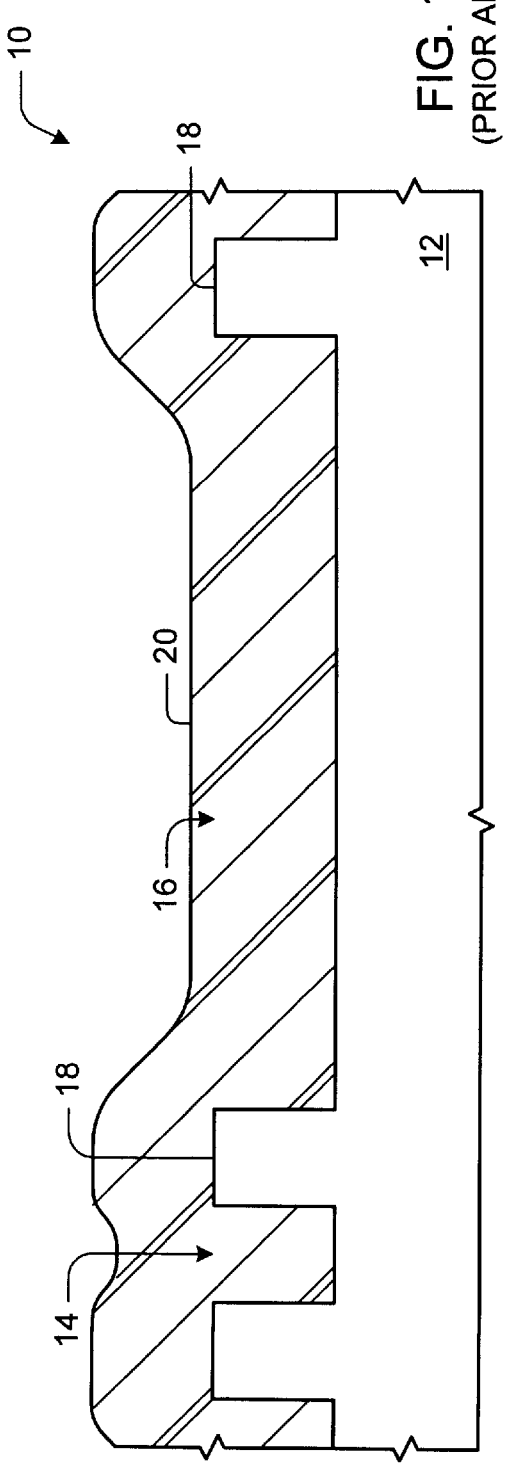

FIG. 1
(PRIOR ART)

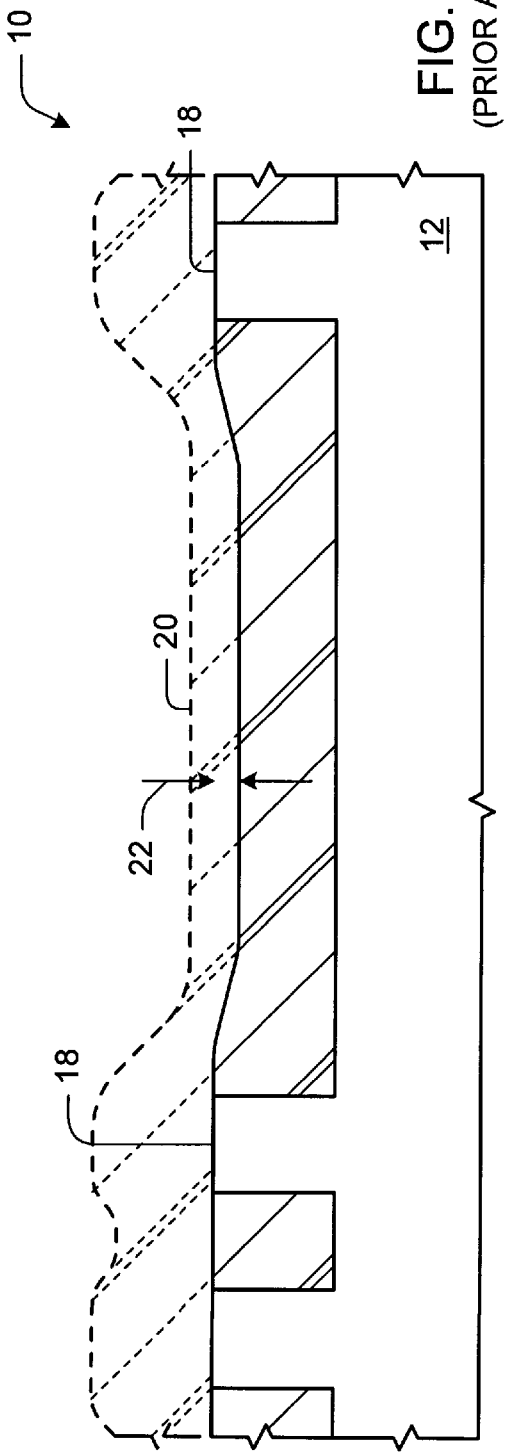

FIG. 2
(PRIOR ART)