US006409413B1

(12) **United States Patent**
Bieg et al.

(10) **Patent No.: US 6,409,413 B1**
(45) **Date of Patent: Jun. 25, 2002**

(54) **LARGE DISPLACEMENT SPHERICAL JOINT**

(75) Inventors: **Lothar F. Bieg**; **Gilbert L. Benavides**, both of Albuquerque, NM (US)

(73) Assignee: **Sandia Corporation**, Albuquerque, NM (US)

(*) Notice: Subject to any disclaimer, the term of this patent is extended or adjusted under 35 U.S.C. 154(b) by 0 days.

(21) Appl. No.: **09/336,182**

(22) Filed: **Jun. 18, 1999**

(51) **Int. Cl.**[7] **F16C 11/06**
(52) **U.S. Cl.** **403/115**; 403/114; 403/122
(58) **Field of Search** 403/113, 114, 403/115, 136, 122

(56) **References Cited**

U.S. PATENT DOCUMENTS

135,771 A * 2/1873 Burtch ..... 403/122 X
2,029,532 A * 2/1936 Karcher 403/114
2,126,443 A * 8/1938 Begley ..... 403/114 X
2,643,144 A * 6/1953 Schwartz 403/115
2,723,571 A * 11/1955 Koenig 403/114
3,012,798 A * 12/1961 Berger 403/113
3,037,799 A * 6/1962 Mulac 403/113
3,072,426 A * 1/1963 Gilbert 403/115
3,638,243 A * 2/1972 Campbell, Jr. et al. 403/115
4,473,240 A * 9/1984 Sanada ..... 403/122 X
4,492,488 A * 1/1985 Warshawsky 403/113
5,755,526 A * 5/1998 Stanevich 403/122

* cited by examiner

Primary Examiner—Lynne H. Browne
Assistant Examiner—David E. Bochna
(74) *Attorney, Agent, or Firm*—Brian W. Dodson

(57) **ABSTRACT**

A new class of spherical joints has a very large accessible full cone angle, a property which is beneficial for a wide range of applications. Despite the large cone angles, these joints move freely without singularities.
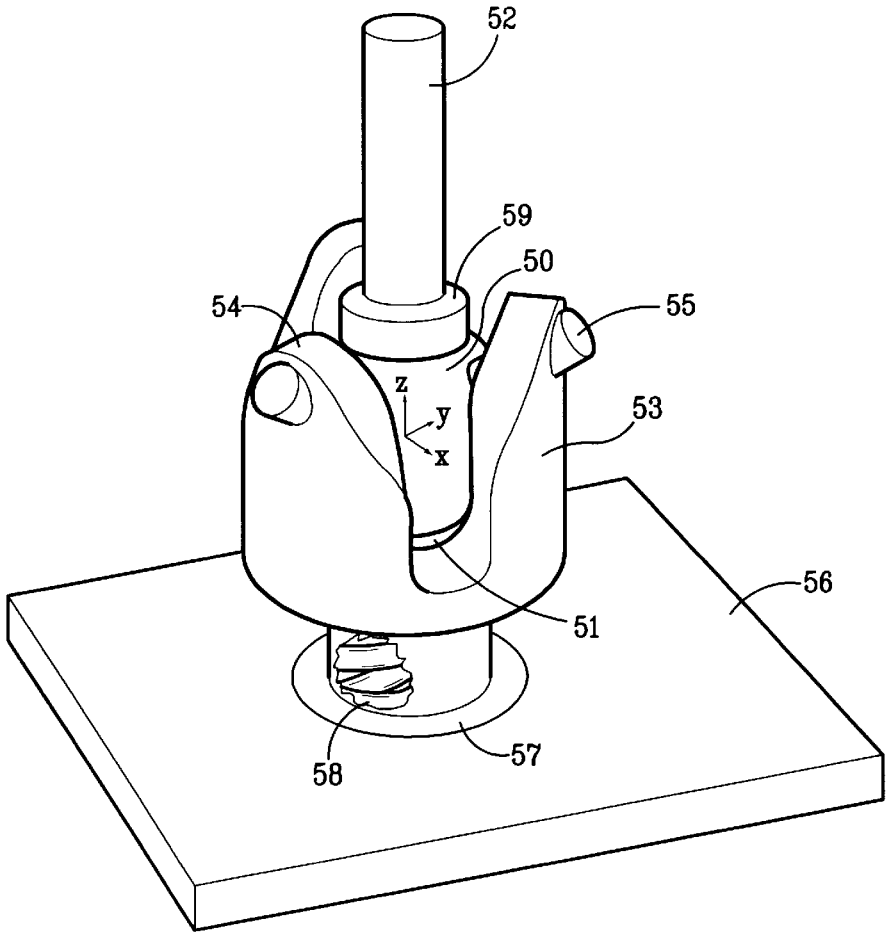
7 Claims, 9 Drawing Sheets