US009408713B2

(12) **United States Patent**
Laurence et al.

(10) **Patent No.: US 9,408,713 B2**
(45) **Date of Patent: Aug. 9, 2016**

(54) **FLEXIBLE VERTEBRAL SPACER**

(71) Applicant: **DePuy Synthes Products, Inc.**, Raynham, MA (US)

(72) Inventors: **Lawton Laurence**, West Chester, PA (US); **Wamis Singhatat**, West Chester, PA (US)

(73) Assignee: **DePuy Synthes Products, Inc.**, Raynham, MA (US)

(*) Notice: Subject to any disclaimer, the term of this patent is extended or adjusted under 35 U.S.C. 154(b) by 0 days.

(21) Appl. No.: **14/523,119**

(22) Filed: **Oct. 24, 2014**

(65) **Prior Publication Data**

US 2015/0045895 A1 Feb. 12, 2015

Related U.S. Application Data

(62) Division of application No. 12/760,956, filed on Apr. 15, 2010, now Pat. No. 8,940,050.

(60) Provisional application No. 61/169,453, filed on Apr. 15, 2009.

(51) **Int. Cl.**

A61F 2/44	(2006.01)
A61F 2/46	(2006.01)
A61F 2/30	(2006.01)

(52) **U.S. Cl.**

CPC ..... ***A61F 2/4425*** (2013.01); ***A61F 2/4465*** (2013.01); ***A61F 2/4611*** (2013.01); (Continued)

(58) **Field of Classification Search**

CPC ... A61F 2/4425; A61F 2/4611; A61F 2/4465; A61F 2002/30018; A61F 2002/30471; A61F 2002/30632; A61F 2002/30629; A61F 2220/0091; A61F 2002/30598; A61F 2250/0029; A61F 2002/30624; A61F 2250/0064; A61F 2002/4415; A61F 2002/30596; A61F 2002/30616

See application file for complete search history.

(56) **References Cited**

U.S. PATENT DOCUMENTS

5,888,223	A	3/1999	Bray, Jr.
6,080,158	A	6/2000	Lin

(Continued)

FOREIGN PATENT DOCUMENTS

WO	WO 2005/077288	A1	8/2005
WO	WO 2008/016598	A2	2/2008
WO	WO 2010/121002		10/2010

OTHER PUBLICATIONS

U.S. Appl. No. 61/169,453, filed Apr. 15, 2009, Laurence.

(Continued)

Primary Examiner — Christopher Beccia
Assistant Examiner — Diana S Jones
(74) *Attorney, Agent, or Firm* — Baker & Hostetler LLP

(57) **ABSTRACT**

A flexible implant system for positioning a flexible spacer between adjacent vertebrae including and interbody spacer and an insertion instrument. The interbody spacer including a central axis, a lateral axis, a top surface positioned generally parallel to the central axis and a plurality of hinge sections extending generally perpendicular to the central axis. A plurality of notches making up the plurality of hinge sections adjacent the top surface that permit the interbody spacer to flex. The interbody spacer further including a groove extending along a lateral side surface, generally parallel to the central axis. An insertion instrument includes a proximal end, a distal end and a tongue extending from the proximal end to the distal end along a non-linear path. The groove slidably engages the tongue to guide the interbody spacer from the proximal end to the distal end along the non-linear path.
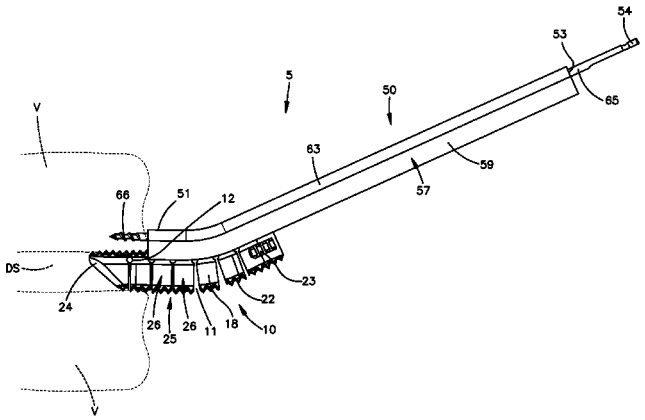
19 Claims, 12 Drawing Sheets