US005604513A

United States Patent [19]

Takahashi et al.

[11] Patent Number: 5,604,513

[45] Date of Patent: Feb. 18, 1997

[54] **SERIAL SAMPLING VIDEO SIGNAL DRIVING APPARATUS WITH IMPROVED COLOR RENDITION**

[75] Inventors: **Seiki Takahashi**; **Hayato Takasago**; **Toshio Tobita**, all of Tokyo; **Hiroaki Ishitani**; **Takatomo Watanabe**, both of Nagaokakyo; **Hiroaki Ideno**, Amagasaki; **Mitiyasu Nounen**, Sanda, all of Japan

[73] Assignee: **Mitsubishi Denki Kabushiki Kaisha**, Tokyo, Japan

[21] Appl. No.: **203,620**

[22] Filed: **Feb. 28, 1994**

Related U.S. Application Data

[63] Continuation of Ser. No. 904,596, Jun. 26, 1992, abandoned.

[30] **Foreign Application Priority Data**

Jun. 27, 1991 [JP] Japan 3-156492

[51] **Int. Cl.**[6] **G09G 5/02**

[52] **U.S. Cl.** **345/153**; 345/88; 345/22

[58] **Field of Search** 345/150, 151, 345/153, 22, 88, 112, 186, 199, 213; 358/324, 325, 337, 339; 348/537

[56] **References Cited**

U.S. PATENT DOCUMENTS

4,121,283	10/1978	Walker	345/115
4,600,274	7/1986	Morozumi	340/703
4,600,945	7/1986	Bolger	358/325
4,716,403	12/1987	Morozumi	340/701
4,745,406	5/1988	Hayashi et al.	340/784

FOREIGN PATENT DOCUMENTS

59-211087	11/1984	Japan .	
6119290	1/1986	Japan .	
0234897	9/1989	Japan .	
1272389	10/1989	Japan .	
8601624	3/1986	WIPO	340/784

Primary Examiner—Richard Hjerpe
Assistant Examiner—Lun-Yi Lao

[57] **ABSTRACT**

A serial sampling video signal driving apparatus receives a plurality of color video signals. A serial sampling video driver samples the color video signals one after the other in cyclic fashion, and provides the sampled values to drive a matrix-type color display. A delay circuit delays one or more of the color video signals at different phases before input to the serial sampling video driver, thereby compensating for differences in sampling times.
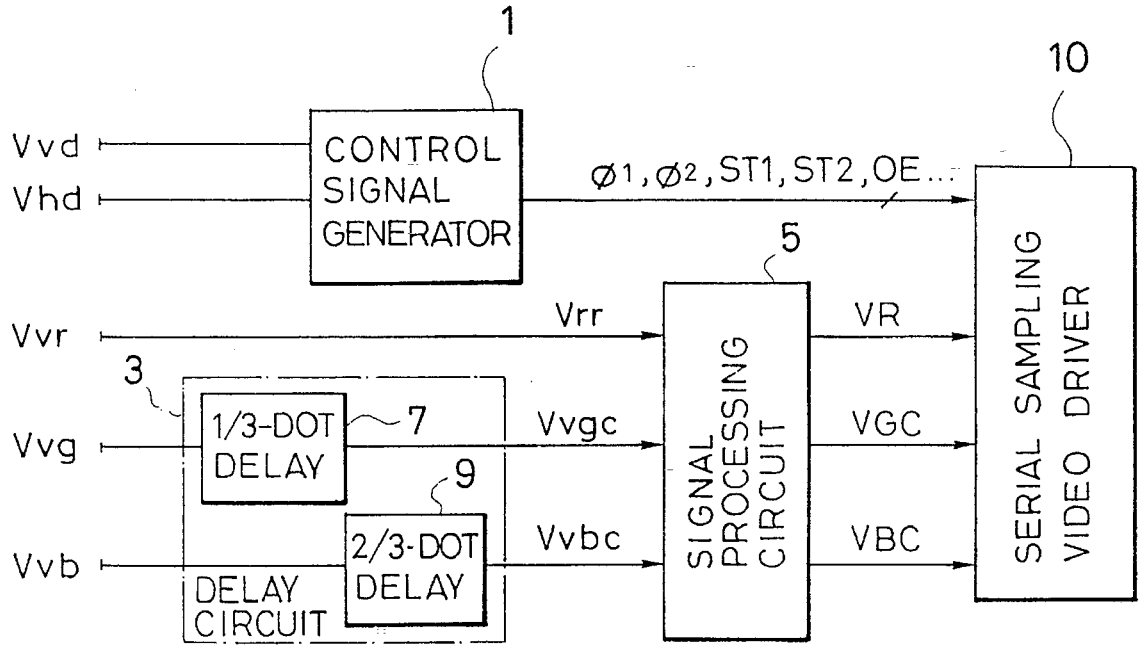
18 Claims, 6 Drawing Sheets