US005500013A

United States Patent [19]

Buscemi et al.

[11] **Patent Number: 5,500,013**

[45] **Date of Patent: Mar. 19, 1996**

[54] **BIODEGRADABLE DRUG DELIVERY VASCULAR STENT**

[75] Inventors: **Paul J. Buscemi**, Long Lake; **Elizabeth A. Stejskal**, St. Paul; **Donald F. Palme, II**, Dayton; **Lixiao Wang**, St. Paul, all of Minn.

[73] Assignee: **Scimed Life Systems, Inc.**, Maple Grove, Minn.

[21] Appl. No.: **372,822**

[22] Filed: **Jan. 13, 1995**

Related U.S. Application Data

[63] Continuation of Ser. No. 42,412, Apr. 2, 1993, abandoned, which is a continuation-in-part of Ser. No. 944,069, Sep. 11, 1992, abandoned, which is a continuation-in-part of Ser. No. 771,655, Oct. 4, 1991, abandoned.

[51] **Int. Cl.**[6] **A61F 2/06**

[52] **U.S. Cl.** **623/1**; 604/104; 606/154; 606/194

[58] **Field of Search** 623/1, 11, 12; 606/151, 154, 192, 194, 153, 197, 199; 604/104

[56] **References Cited**

U.S. PATENT DOCUMENTS

4,950,258	8/1990	Kawai et al.	604/281
5,024,671	6/1991	Tu et al.	623/1
5,092,885	3/1992	Yamada et al.	623/1
5,100,429	3/1992	Sinofsky et al.	623/1
5,147,370	9/1992	McNamara et al.	606/194
5,201,778	4/1993	Brotzu et al.	623/1
5,234,457	8/1993	Andersen	606/154
5,376,376	12/1994	Li	623/1

Primary Examiner—Paul B. Prebilic
Attorney, Agent, or Firm—Vidas, Arrett & Steinkraus

[57] **ABSTRACT**

A stent includes a main body of a generally tubular shape for insertion into a lumen of a vessel of a living being. The tubular main body includes a substantially biodegradable matrix having collagen IV and laminin that enclose voids within the matrix. The tubular main body also includes a biodegradable strengthening material in contact with the matrix to strengthen the matrix. The tubular main body is essentially saturated with drugs.
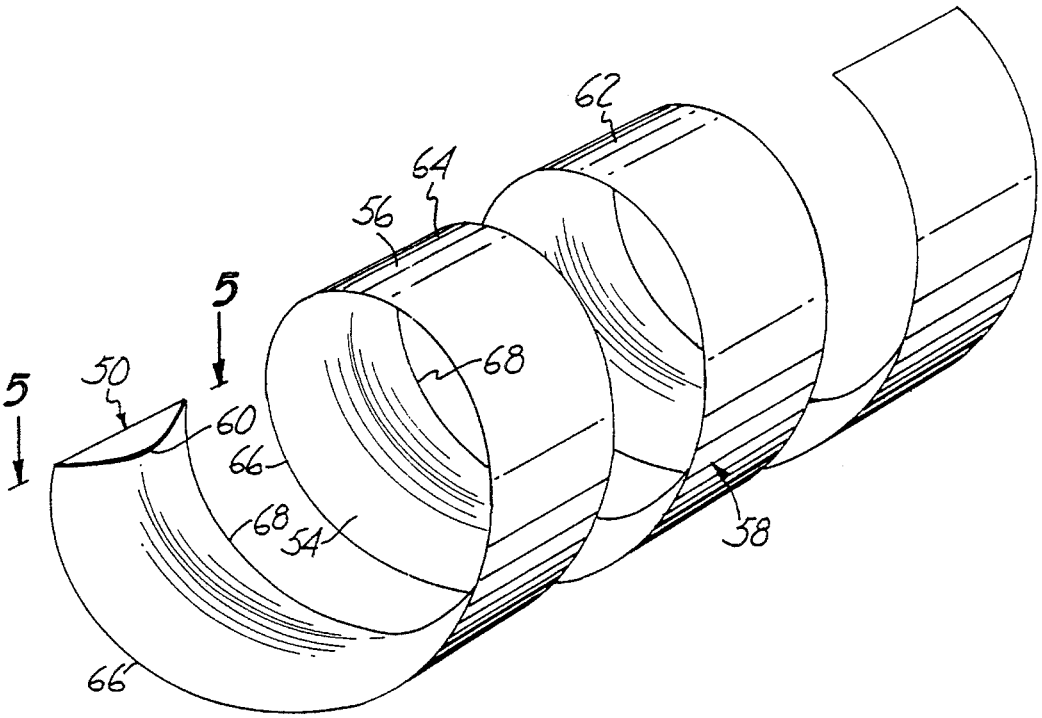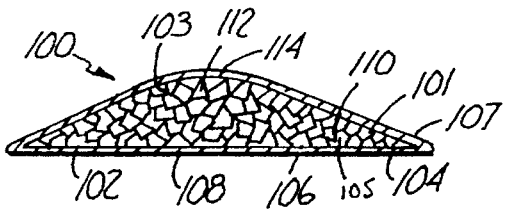
8 Claims, 4 Drawing Sheets