No. 797,512. PATENTED AUG. 15, 1905.

J. J. GLAUSER.

APPARATUS FOR THE MANUFACTURE OF FROZEN LIQUIDS.

APPLICATION FILED NOV. 10, 1904.

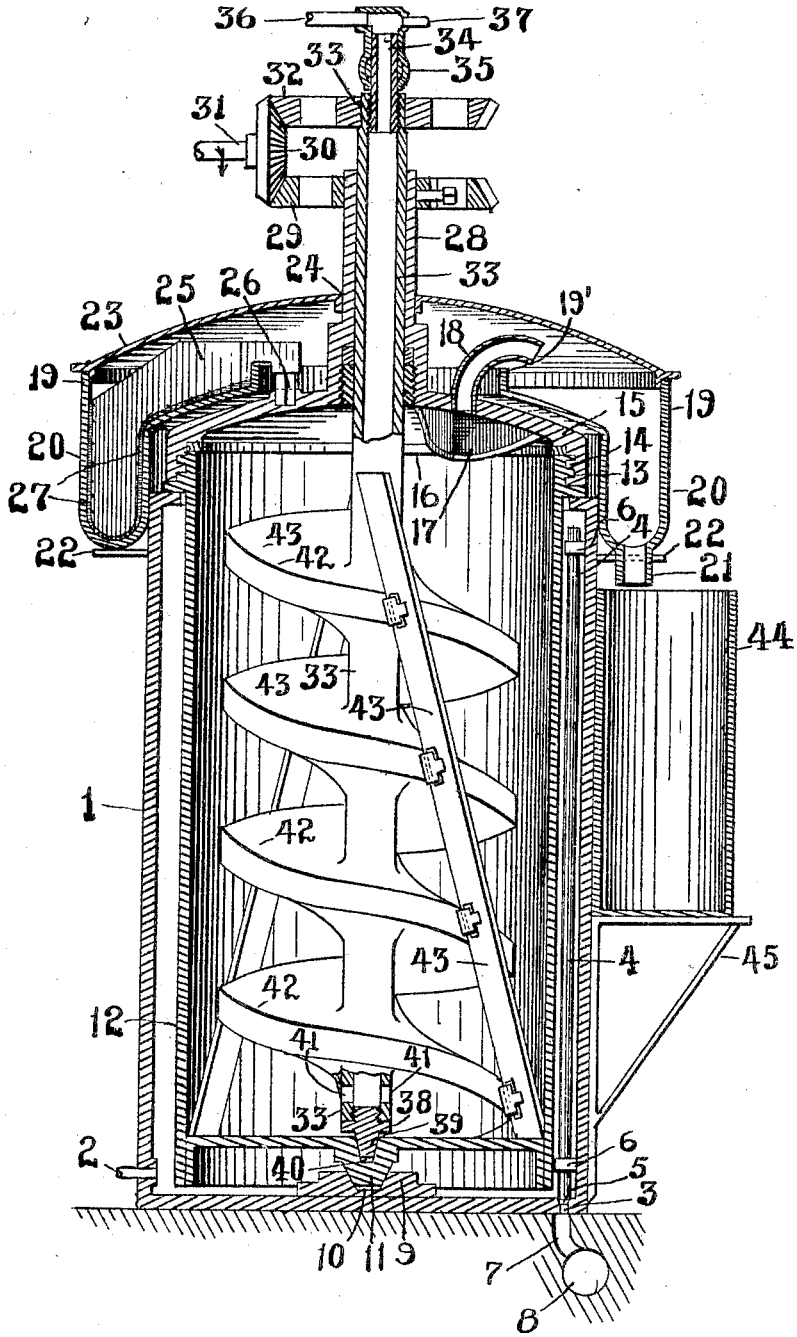

Witnesses:

Geo. H. Harvey.

R. W. Schulte.

Inventor,

J. J. Glauser,

by his Attorney

Edward A. Lawrence.

ANDREW B. GRAHAM CO., PHOTO-LITHOGRAPHERS, WASHINGTON, D. C.