US007382212B2

(12) **United States Patent**
Lo Hine Tong et al.

(10) **Patent No.: US 7,382,212 B2**
(45) **Date of Patent: Jun. 3, 2008**

(54) **TRANSITION BETWEEN A RECTANGULAR WAVEGUIDE AND A MICROSTRIP LINE COMPRISED OF A SINGLE METALLIZED BAR**

(75) Inventors: **Dominique Lo Hine Tong**, Rennes (FR); **Ali Louzir**, Rennes (FR); **Christian Person**, Locmaria Plouzane (FR); **Jean-Philippe Coupez**, Le Relecq Kerhuon (FR)

(73) Assignee: **Thomson Licensing**, Boulogne-Billancourt (FR)

(*) Notice: Subject to any disclaimer, the term of this patent is extended or adjusted under 35 U.S.C. 154(b) by 129 days.

(21) Appl. No.: **10/540,642**

(22) PCT Filed: **Dec. 22, 2003**

(86) PCT No.: **PCT/FR03/50201**

§ 371 (c)(1),
(2), (4) Date: **Mar. 3, 2006**

(87) PCT Pub. No.: **WO2004/066432**

PCT Pub. Date: **Aug. 5, 2004**

(65) **Prior Publication Data**

US 2006/0152298 A1 Jul. 13, 2006

(30) **Foreign Application Priority Data**

Jan. 3, 2003 (FR) 03 00045

(51) **Int. Cl.**
H01P 5/107 (2006.01)

(52) **U.S. Cl.** **333/26**; 333/34; 29/600

(58) **Field of Classification Search** 333/26, 333/34; 29/600
See application file for complete search history.

(56) **References Cited**

U.S. PATENT DOCUMENTS

2,897,461 A 7/1959 Ashbaugh et al.
3,265,995 A * 8/1966 Hamasaki ..... 333/21 R
3,932,823 A 1/1976 Lavedan, Jr. et al.

(Continued)

FOREIGN PATENT DOCUMENTS

EP 0458364 11/1991

(Continued)

OTHER PUBLICATIONS

"A Transition from Microstrip to Dielectric-filled Rectangular Waveguide in surface Mounting"; Sano et al; 2002 IEEE MTT-S Digest, Jun. 2002; pp. 813-816.*

(Continued)

Primary Examiner—Benny Lee
(74) *Attorney, Agent, or Firm*—Joseph J. Laks; Robert D. Shedd; Brian J. Cromarty

(57) **ABSTRACT**

The transition between a rectangular waveguide and a microstrip line consists of a ribbed rectangular waveguide realised in a foam bar in synthetic material of which the metallized base under the rib continues in the form of a foam plate constituting a substrate for the microstrip line, the rib having a base extending between the upper plane of the ribbed waveguide and the upper plane of the substrate and the microstrip line being disposed on the upper plane of the substrate in the continuation of the base of the rib.
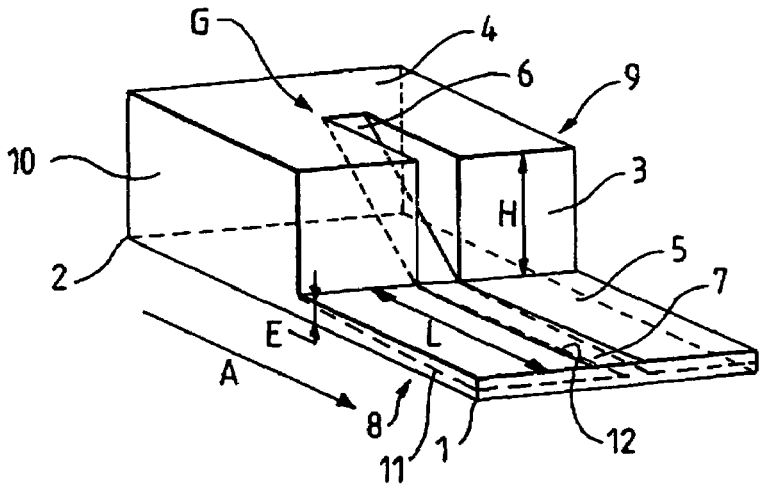
6 Claims, 1 Drawing Sheet