US009680012B1

(12) **United States Patent**
Diaz et al.

(10) **Patent No.: US 9,680,012 B1**
(45) **Date of Patent: Jun. 13, 2017**

(54) **SEMICONDUCTOR DEVICE STRUCTURE AND METHOD FOR FORMING THE SAME**

(71) Applicant: **Taiwan Semiconductor Manufacturing Co., Ltd.**, Hsinchu (TW)

(72) Inventors: **Carlos H. Diaz**, Mountain View, CA (US); **Jean-Pierre Colinge**, Hsinchu (TW); **Jonathan Tsung-Yung Chang**, Hsinchu (TW); **Yue-Der Chih**, Hsinchu (TW)

(73) Assignee: **Taiwan Semiconductor Manufacturing Co., Ltd.**, Hsinchu (TW)

(*) Notice: Subject to any disclaimer, the term of this patent is extended or adjusted under 35 U.S.C. 154(b) by 0 days.

(21) Appl. No.: **15/071,876**

(22) Filed: **Mar. 16, 2016**

(51) **Int. Cl.**

H01L 29/732	(2006.01)
H01L 29/735	(2006.01)
H01L 29/80	(2006.01)
H01L 21/00	(2006.01)
H01L 21/338	(2006.01)
H01L 29/78	(2006.01)
H01L 29/06	(2006.01)
H01L 29/08	(2006.01)
H01L 29/10	(2006.01)
H01L 29/423	(2006.01)
H01L 27/088	(2006.01)
H01L 29/66	(2006.01)

(52) **U.S. Cl.**
CPC ***H01L 29/7827*** (2013.01); ***H01L 27/088*** (2013.01); ***H01L 29/0676*** (2013.01); ***H01L 29/0847*** (2013.01); ***H01L 29/1037*** (2013.01); ***H01L 29/42356*** (2013.01); ***H01L 29/66666*** (2013.01)

(58) **Field of Classification Search**
CPC H01L 29/66795; H01L 29/785; H01L 27/0886; H01L 27/0924; H01L 21/02603; H01L 21/823821; H01L 21/845; H01L 27/1211; H01L 29/7827
USPC 257/183, 187, 213, 263, 302, 328; 438/156, 173, 192, 212, 268
See application file for complete search history.

(56) **References Cited**

U.S. PATENT DOCUMENTS

7,195,959	B1 *	3/2007	Plummer	H01L 21/84 257/E21.389
8,999,805	B1	4/2015	Colinge et al.	
2011/0207409	A1	8/2011	Ker et al.	
2015/0006996	A1	1/2015	Volvovski et al.	
2015/0069475	A1	3/2015	Colinge et al.	

(Continued)

OTHER PUBLICATIONS

U.S. Appl. No. 14/720,721, filed May 22, 2015.

(Continued)

Primary Examiner — Hsien Ming Lee
(74) *Attorney, Agent, or Firm* — Birch, Stewart, Kolasch & Birch, LLP

(57) **ABSTRACT**

A semiconductor device structure is provided. The semiconductor device structure includes a substrate having a top surface. The semiconductor device structure includes a first pillar structure over the substrate. The first pillar structure includes a first heavily n-doped layer, a first p-doped layer, an n-doped layer, and a first heavily p-doped layer, which are sequentially stacked together. The first pillar structure extends in a direction away from the substrate.
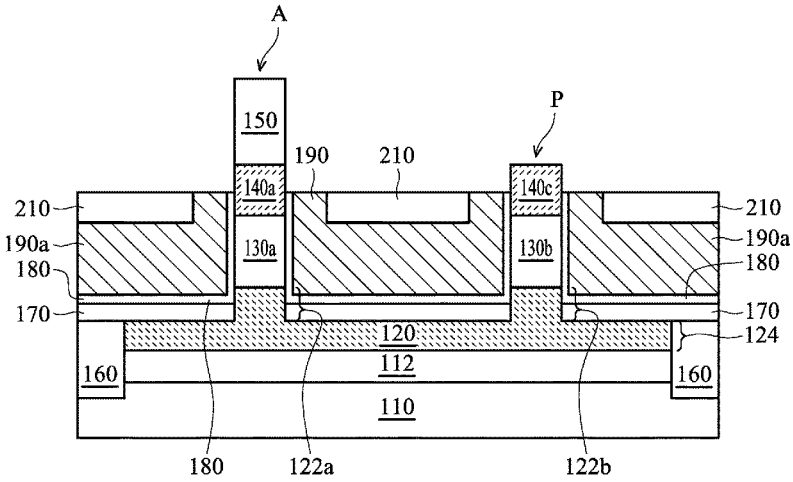
20 Claims, 57 Drawing Sheets