US007169112B2

(12) **United States Patent**
Caldwell

(10) **Patent No.: US 7,169,112 B2**
(45) **Date of Patent: Jan. 30, 2007**

(54) **NON-CONTACT RESPIRATION MONITOR**

(75) Inventor: **Donald W. Caldwell**, Frederick, MD (US)

(73) Assignee: **The United States of America as represented by the Secretary of the Army**, Washington, DC (US)

(*) Notice: Subject to any disclaimer, the term of this patent is extended or adjusted under 35 U.S.C. 154(b) by 0 days.

(21) Appl. No.: **10/936,992**

(22) Filed: **Sep. 9, 2004**

(65) **Prior Publication Data**

US 2005/0065449 A1 Mar. 24, 2005

Related U.S. Application Data

(60) Provisional application No. 60/501,403, filed on Sep. 10, 2003.

(51) **Int. Cl.**
A61B 5/00 (2006.01)

(52) **U.S. Cl.** **600/533**; 600/538

(58) **Field of Classification Search** 600/529–538; 128/205.27–205.29, 206.11–206.2
See application file for complete search history.

(56) **References Cited**

U.S. PATENT DOCUMENTS

4,827,924 A * 5/1989 Japuntich 128/206.12
5,063,938 A * 11/1991 Beck et al. 600/537
5,383,470 A * 1/1995 Kolbly 600/538
5,857,460 A * 1/1999 Popitz 128/206.21
6,468,222 B1 * 10/2002 Mault et al. 600/531
6,895,962 B2 * 5/2005 Kullik et al. 128/204.18
2002/0062830 A1 * 5/2002 Meier et al. 128/206.12
2003/0004427 A1 * 1/2003 Swisa 600/539
2004/0163648 A1 * 8/2004 Burton 128/204.21
2004/0233058 A1 * 11/2004 Dodds 340/573.1

* cited by examiner

Primary Examiner—Robert L. Nasser
(74) *Attorney, Agent, or Firm*—Elizabeth Arwine

(57) **ABSTRACT**

This invention relates to non-contact monitoring devices, and more particularly, non-contact respiration monitoring devices. According to the invention there is provided a monitoring device having a body defining an air monitoring channel between an air inlet and an air outlet. Disposed in monitoring channel is a respiration detection means, such as a flap-valve, which operates with associated logic circuitry to report the presence or absence of respiration via visual and audible displays. The device may be configured to attached, or be integrally connected to, the air input orifice of an air filter canister of a gas mask or the like. Alternatively, the device may be associated with the air output orifices or valves of a gas mask or the like.
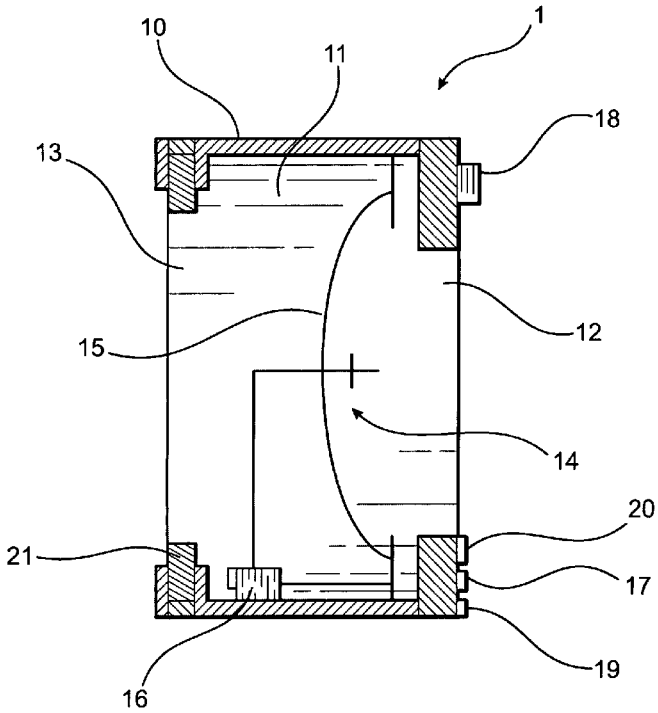
23 Claims, 3 Drawing Sheets