US005768812A

United States Patent [19]

Cross

[11] **Patent Number: 5,768,812**

[45] **Date of Patent: Jun. 23, 1998**

[54] **DISPLAY MOUNT APPARATUS**

[76] Inventor: **Carroll N. Cross**, 3202 Holiday Ave., Apopka, Fla. 32703

[21] Appl. No.: **540,846**

[22] Filed: **Oct. 11, 1995**

[51] **Int. Cl.**[6] **G09D 3/04**

[52] **U.S. Cl.** **40/120**; 283/2; 283/58

[58] **Field of Search** 40/120; 248/459, 248/460, 465; 281/33; 283/2–4, 57, 58

[56] **References Cited**

U.S. PATENT DOCUMENTS

1,784,736	12/1930	Lear	281/33
3,002,720	10/1961	Cross	40/120 X
3,013,359	12/1961	Cross et al.	40/120 X
3,068,139	12/1962	Cross	40/120 X
4,975,137	12/1990	Cross	40/120 X

FOREIGN PATENT DOCUMENTS

701767	1/1941	Germany	283/4

Primary Examiner—Cassandra H. Davis
Attorney, Agent, or Firm—William M. Hobby, III

[57] **ABSTRACT**

A display mount apparatus has three panels hinged together with a single ductile hinge to form a calendar display with two covered display panels and an easel panel. A calendar is stapled to one of the display panels through the covering and through the ductile hinge to force the ductile hinge to bend along a predetermined hinge line. A method of making a display mount includes attaching a ductile hinge between first and second panels, then cutting an easel panel from a portion of the first panel and into the ductile hinge to form the easel panel already attached to the ductile hinge. The first panel may be a single panel or may be folded, in a face-to-face relationship so that the attached easel portion on one side can be rotated on the ductile hinge from one side of the folded first panel. The back of the first panel and one side of the easel panel may have printing thereon.
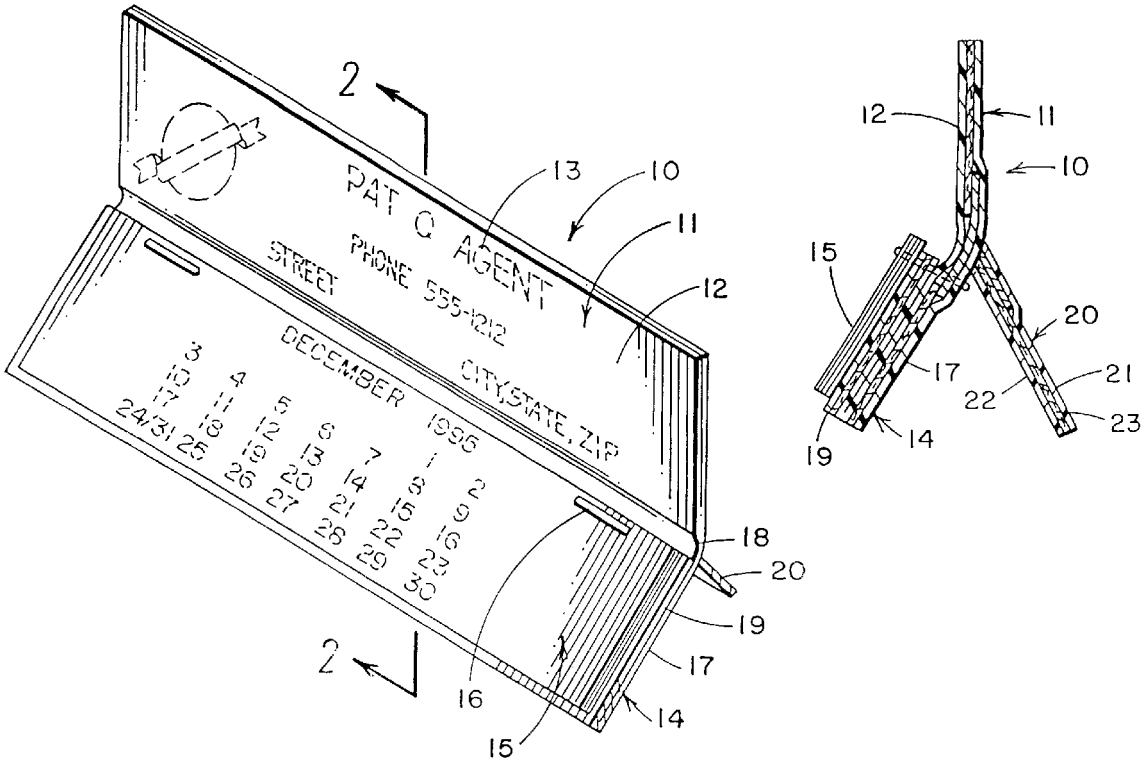
6 Claims, 1 Drawing Sheet