United States Patent [19]

Matone, Jr. et al.

[11] **Patent Number: 4,758,712**

[45] **Date of Patent: Jul. 19, 1988**

[54] **PROTECTIVE KEYBOARD ENCLOSURE ASSEMBLY**

[76] Inventors: **Charles J. Matone, Jr.**, R.D. #9, Box 602A, Greensburg, Pa. 15601; **Dwayne W. Altman**, 209 Belmont St., North Huntingdon, Pa. 15642

[21] Appl. No.: **89,982**

[22] Filed: **Aug. 27, 1987**

[51] **Int. Cl.**[4] **G06C 7/02**; H01H 9/04

[52] **U.S. Cl.** ..... **235/145 R**; 235/1 D; 200/302.2; 312/208

[58] **Field of Search** ..... 235/1 D, 145 R; 200/5 R, 5 A, 301, 302.1, 302.2, 303; 312/208, 284

[56] **References Cited**

U.S. PATENT DOCUMENTS

2,492,262	12/1949	Boyden et al.	235/1 D
3,890,480	6/1975	Berling et al.	200/302.2
4,066,850	1/1978	Heys, Jr.	235/145 R X
4,326,193	4/1982	Markley et al.	235/145 R X
4,396,830	8/1983	Isozaki et al.	235/145 R
4,449,763	5/1984	Barnett	312/208
4,546,947	10/1985	Gesten	312/284 X

Primary Examiner—B. R. Fuller

Attorney, Agent, or Firm—H. Keith Hauger

[57] **ABSTRACT**

A protective keyboard enclosure assembly consisting of an upper section that mounts over a lower section and conforms to the size and shape of an electronic keyboard it houses and shields. The upper section allows a keyboard operator to push keys through a transparent, flexible, durable membrane which is readily interchangeable. The keyboard enclosure assembly protects this very sensitive electronic keyboard from any kind of harmful elements and potentially dirty hands and fingers of an operator all of which especially prevail in an industrial or manufacturing plant.
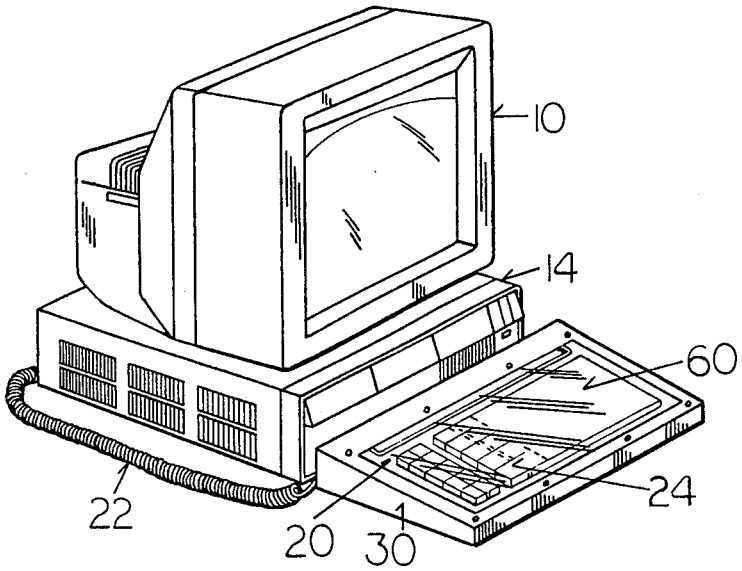
9 Claims, 2 Drawing Sheets