FIG. 2A

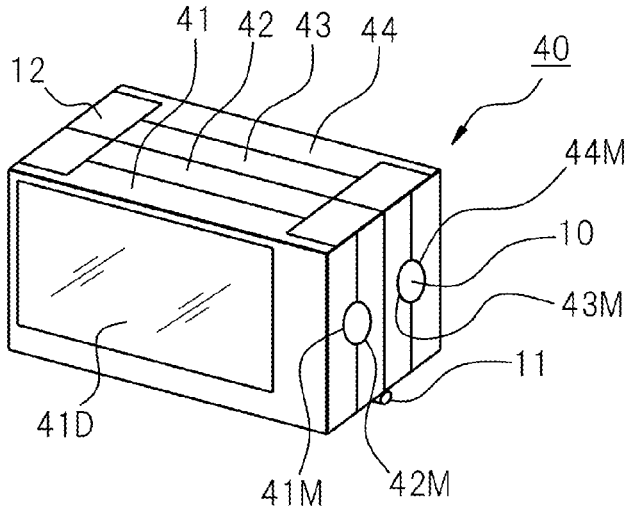
41
42
43
44
12
40
44M
10
43M
11
41D
41M
42M

FIG. 2B

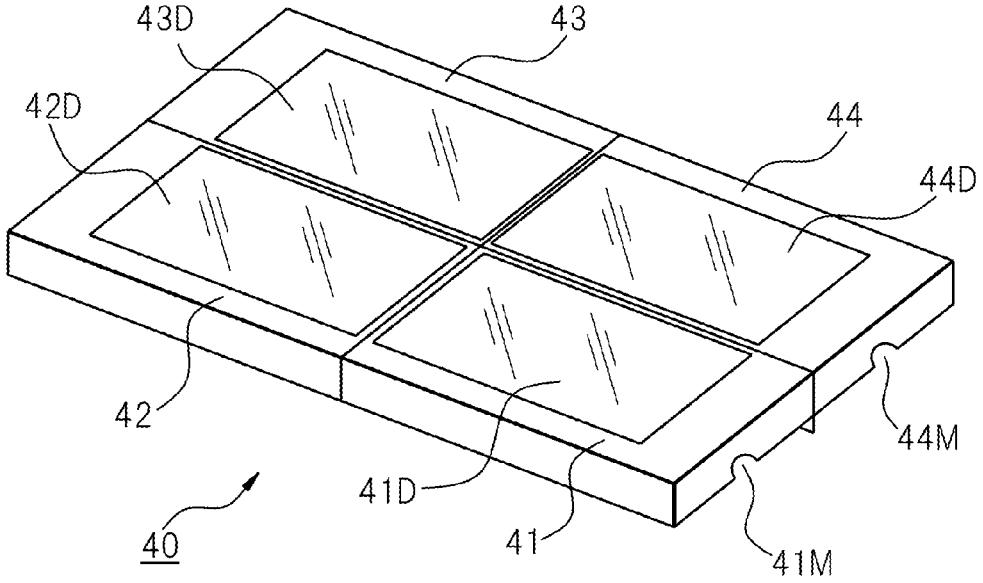
43D
43
42D
44
44D
42
44M
41D
41
41M
40