US009411112B2

(12) **United States Patent**
Ooi et al.

(10) **Patent No.: US 9,411,112 B2**
(45) **Date of Patent: Aug. 9, 2016**

(54) **PHOTOELECTRIC HYBRID BOARD, INFORMATION PROCESSOR, AND METHOD FOR MANUFACTURING PHOTOELECTRIC HYBRID BOARD**

(71) Applicant: **FUJITSU LIMITED**, Kawasaki-shi, Kanagawa (JP)

(72) Inventors: **Takahiro Ooi**, Kawasaki (JP); **Michihiro Takamatsu**, Zama (JP); **Yoshinori Mesaki**, Yokohama (JP); **Mitsuo Suehiro**, Kawasaki (JP)

(73) Assignee: **FUJITSU LIMITED**, Kawasaki (JP)

(*) Notice: Subject to any disclaimer, the term of this patent is extended or adjusted under 35 U.S.C. 154(b) by 0 days.

(21) Appl. No.: **14/791,807**

(22) Filed: **Jul. 6, 2015**

(65) **Prior Publication Data**

US 2016/0033727 A1 Feb. 4, 2016

(30) **Foreign Application Priority Data**

Jul. 31, 2014 (JP) 2014-156285

(51) **Int. Cl.**

G02B 6/12	(2006.01)
H05K 3/00	(2006.01)
G02B 6/42	(2006.01)
G02B 6/125	(2006.01)

(52) **U.S. Cl.**

CPC ***G02B 6/428*** (2013.01); ***G02B 6/12002*** (2013.01); ***G02B 6/12004*** (2013.01); ***G02B 6/125*** (2013.01); ***G02B 6/4214*** (2013.01); ***G02B 6/4246*** (2013.01); ***G02B 6/4257*** (2013.01); *G02B 2006/12104* (2013.01); *G02B 2006/12147* (2013.01)

(58) **Field of Classification Search**

CPC G02B 6/428; G02B 6/12002; G02B 6/12004; G02B 6/125; G02B 6/4214; G02B 6/4246; G02B 6/4257

USPC 385/14; 29/829

See application file for complete search history.

(56) **References Cited**

U.S. PATENT DOCUMENTS

2005/0213872 A1* 9/2005 Iwamori G02B 6/12002 385/14

FOREIGN PATENT DOCUMENTS

JP	2007-108228 A	4/2007
JP	2008-241956 A	10/2008

* cited by examiner

Primary Examiner — Jerry Blevins

(74) *Attorney, Agent, or Firm* — Squire Patton Boggs (US) LLP

(57) **ABSTRACT**

A photoelectric hybrid board includes: a first board on which a circuit is formed; an optical waveguide layer stacked with the first board; a first optical waveguide section formed in a direction of stacking in the first board and the optical waveguide layer; and a concave part formed, from the optical waveguide layer side, in the optical waveguide layer in an intersection part of the optical waveguide layer and the first optical waveguide section.
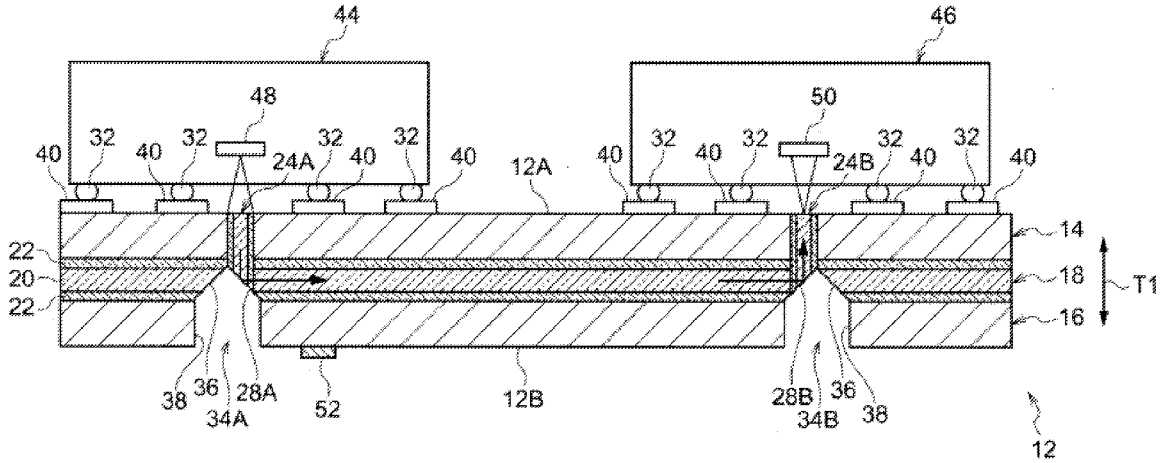
11 Claims, 11 Drawing Sheets