US009410312B2

(12) **United States Patent**
Thrall et al.

(10) **Patent No.: US 9,410,312 B2**
(45) **Date of Patent: Aug. 9, 2016**

(54) **DEPLOYABLE PORTABLE SHELTER**

(71) Applicant: **University of Notre Dame du Lac**, Notre Dame, IN (US)

(72) Inventors: **Ashley P. Thrall**, South Bend, IN (US); **Angelene J. Dascanio**, Los Olivos, CA (US); **Chad P. Quaglia**, East Bridgewater, MA (US)

(73) Assignee: **University of Notre Dume du Lac**, Notre Dame, IN (US)

(*) Notice: Subject to any disclaimer, the term of this patent is extended or adjusted under 35 U.S.C. 154(b) by 0 days.

(21) Appl. No.: **14/604,211**

(22) Filed: **Jan. 23, 2015**

(65) **Prior Publication Data**

US 2016/0090731 A1 Mar. 31, 2016

Related U.S. Application Data

(60) Provisional application No. 61/943,142, filed on Feb. 21, 2014.

(51) **Int. Cl.**

E04B 1/343	(2006.01)
E04B 1/344	(2006.01)
E04H 1/12	(2006.01)
E04H 15/00	(2006.01)

(52) **U.S. Cl.**

CPC ***E04B 1/34336*** (2013.01); ***E04B 1/3445*** (2013.01); ***E04B 1/34357*** (2013.01); ***E04B 1/34384*** (2013.01); ***E04H 1/1205*** (2013.01); ***E04H 15/008*** (2013.01); *E04B 2001/34389* (2013.01)

(58) **Field of Classification Search**

CPC E04B 1/34336; E04B 1/34357; E04B 1/34384; E04B 1/34321; E04B 1/3445; E04B 2001/34389; E04H 1/1205; E04H 15/008

USPC 52/64, 69, 70, 71, 79.5, 745.02

See application file for complete search history.

(56) **References Cited**

U.S. PATENT DOCUMENTS

3,407,546	A *	10/1968	Yates	E04B 1/34384	135/115
4,926,591	A *	5/1990	Buijs	E04B 1/3447	52/122.1
RE34,468	E *	12/1993	Rau	E04H 3/24	296/26.02
5,319,904	A *	6/1994	Pascoe	E04H 1/1205	52/584.1
5,331,778	A *	7/1994	Mazpule	E04B 1/34321	52/264
6,318,043	B1 *	11/2001	Johnson	E04H 1/1205	52/639
6,607,421	B1 *	8/2003	Rossi	A63H 3/52	446/478
8,763,315	B2 *	7/2014	Hartman	E04B 1/3445	52/71
9,016,001	B2 *	4/2015	Heger	E04B 1/34357	52/79.5
2015/0218794	A1 *	8/2015	Martyn	E04B 1/3441	52/79.5

FOREIGN PATENT DOCUMENTS

GB	750486 A *	6/1956	.....	E04B 1/34315
GB	1577935 A *	10/1980	.....	E04B 1/34357

* cited by examiner

Primary Examiner — Patrick Maestri
Assistant Examiner — Joseph J Sadlon
(74) *Attorney, Agent, or Firm* — Greenberg Traurig, LLP

(57) **ABSTRACT**

A shelter has a packaged configuration and a deployed configuration. The shelter has four panels, each with four edges and two faces. The first and fourth panels have a rectangular shape, and the second and third panels have a quadrangle shape. The relationship of panel edge lengths and angles of the quadrangle shelter panels create a sturdy enclosure that is easy to erect, manipulate, and reconfigure. Furthermore, the shelter may be erected by rotating the panels into place via pivotal connections between the panels and optionally through the use of a lever arm.
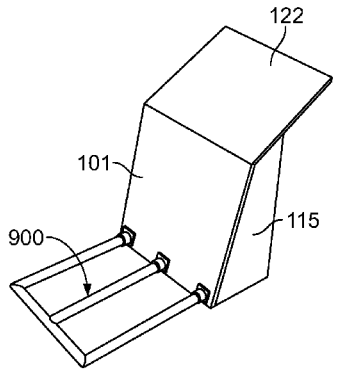
12 Claims, 9 Drawing Sheets