Feb. 21, 1967 R. R. PROCTOR ET AL 3,304,612

METHOD AND APPARATUS FOR CONVERTING CARTOGRAPH COORDINATES TO PERMANENT DIGITAL FORM

Filed Dec. 23, 1963 3 Sheets-Sheet 1

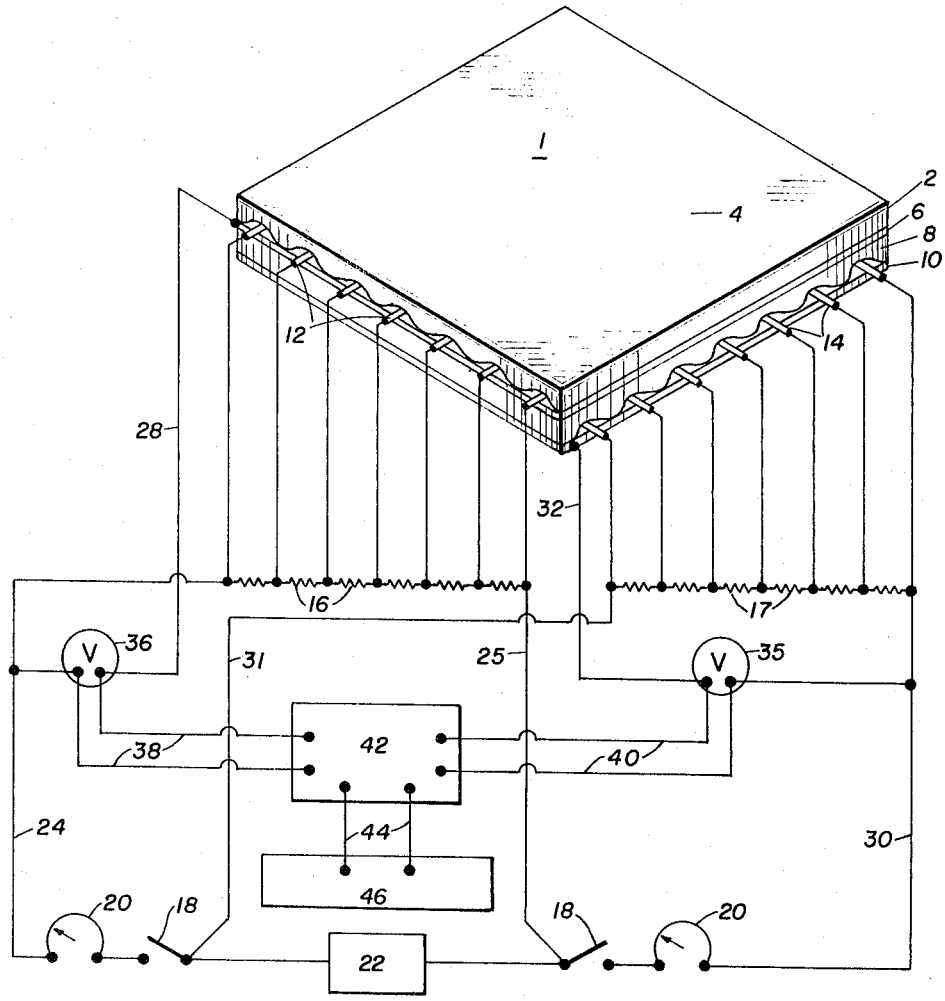

FIG. 1

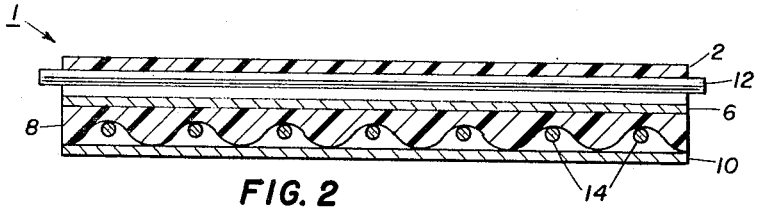

FIG. 2

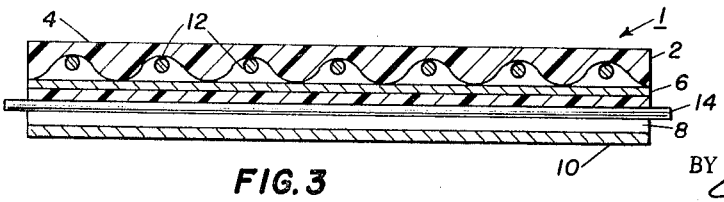

FIG. 3

INVENTORS.
RONALD R. PROCTOR
ROBERT G. MOYER
BY Edward H. Sang
ATTORNEY.