912X

# Barnum & Brooks.

## Alcohol Still.

Patented Jul. 13, 1808.

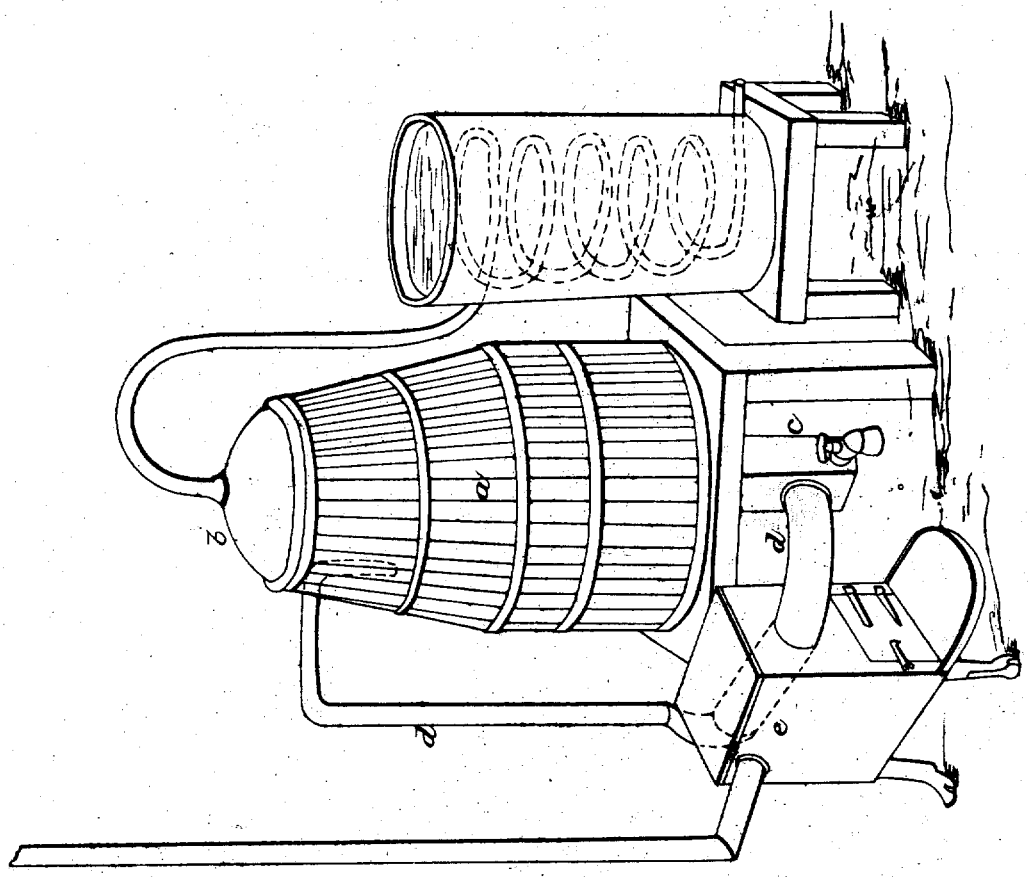


THE ECKERT LITHOGRAPHING CO., WASHINGTON, D. C.