US007292111B2

(12) **United States Patent**
Abbink et al.

(10) **Patent No.: US 7,292,111 B2**
(45) **Date of Patent: Nov. 6, 2007**

(54) **MIDDLE LAYER OF DIE STRUCTURE THAT COMPRISES A CAVITY THAT HOLDS AN ALKALI METAL**

(75) Inventors: **Henry C. Abbink**, Westlake Village, CA (US); **William P. Debley**, Northridge, CA (US); **Christine E. Geosling**, Calabasas, CA (US); **Daryl K. Sakaida**, Oak Park, CA (US); **Robert E. Stewart**, Woodland Hills, CA (US)

(73) Assignee: **Northrop Grumman Corporation**, Los Angeles, CA (US)

(*) Notice: Subject to any disclaimer, the term of this patent is extended or adjusted under 35 U.S.C. 154(b) by 397 days.

(21) Appl. No.: **10/831,812**

(22) Filed: **Apr. 26, 2004**

(65) **Prior Publication Data**

US 2005/0236460 A1 Oct. 27, 2005

(51) **Int. Cl.**
H01J 25/50 (2006.01)

(52) **U.S. Cl.** **331/94.1**; 331/3

(58) **Field of Classification Search** 331/94.1, 331/3; 164/312

See application file for complete search history.

(56) **References Cited**

U.S. PATENT DOCUMENTS

5,192,921	A *	3/1993	Chantry et al.	331/3
5,248,883	A *	9/1993	Brewer et al.	250/292
6,570,459	B1	5/2003	Nathanson et al.	
2002/0163394	A1	11/2002	Hollberg et al.	
2005/0184815	A1 *	8/2005	Lipp et al.	331/94.1

OTHER PUBLICATIONS

U.S. Appl. No. 60/534,420.*

* cited by examiner

Primary Examiner—Len Tran
(74) *Attorney, Agent, or Firm*—Carmen B. Patti & Assoc., LLC

(57) **ABSTRACT**

An apparatus in one example comprises a die structure that comprises a middle layer, a first outside layer, and a second outside layer. The middle layer comprises a cavity that holds an alkali metal, and one of the first outside layer and the second outside layer comprises a channel that leads to the cavity. The middle layer, the first outside layer, and the second outside layer comprise dies from one or more wafer substrates.
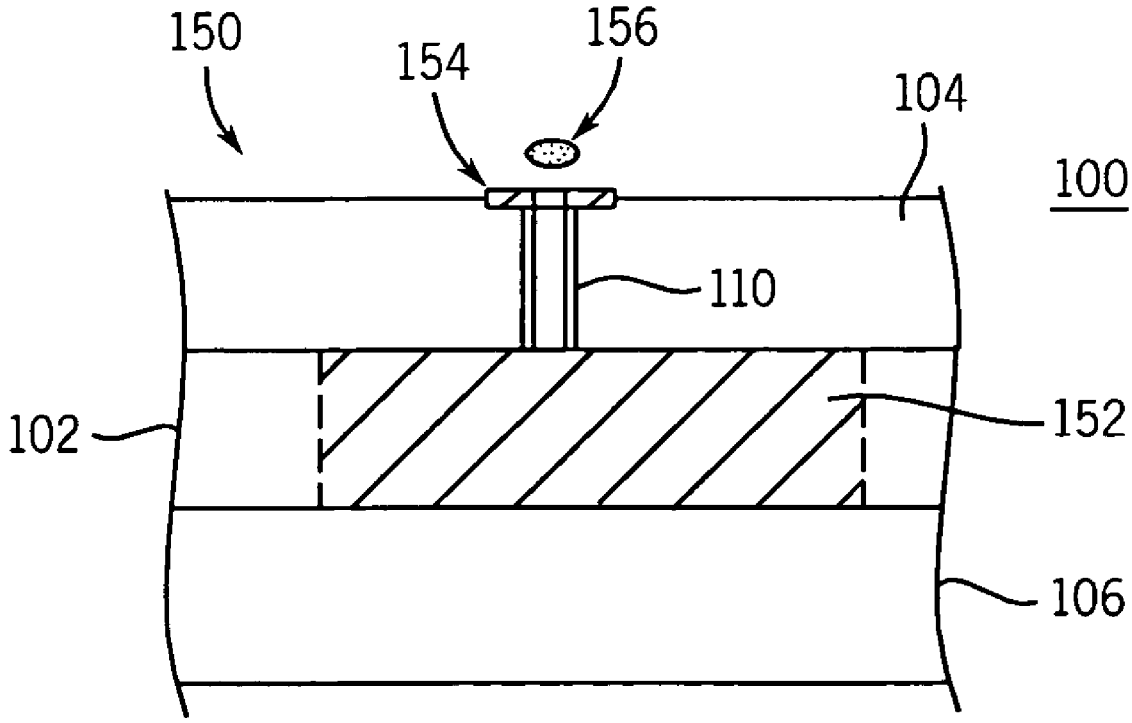
16 Claims, 3 Drawing Sheets