June 15, 1965 G. H. WHITE 3,189,511

GYPSUM WALLBOARD

Filed Nov. 23, 1962

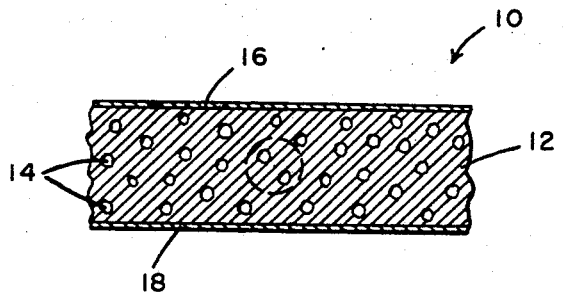

Fig. 1

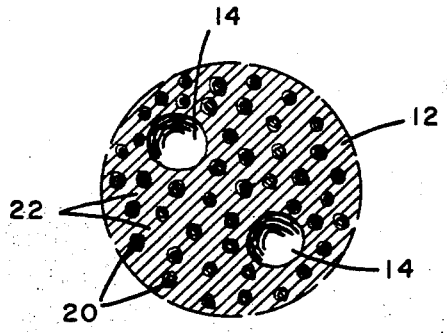

Fig. 2

INVENTOR.
George H. White
BY
Robert F. Hause
ATTORNEY