Nov. 20, 1945. J. V. HORR 2,389,511

DISPLAY DEVICE

Filed Jan. 22, 1944

Fig. 1.

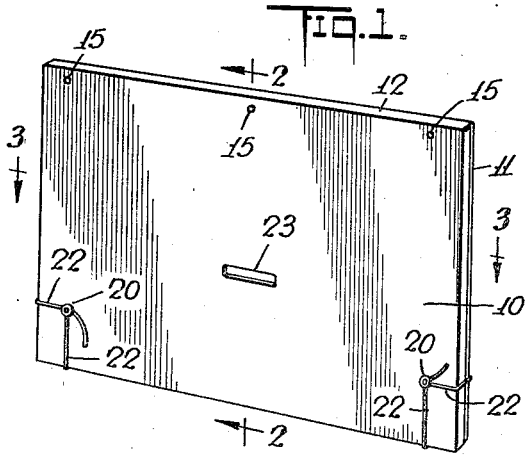

Fig. 2.

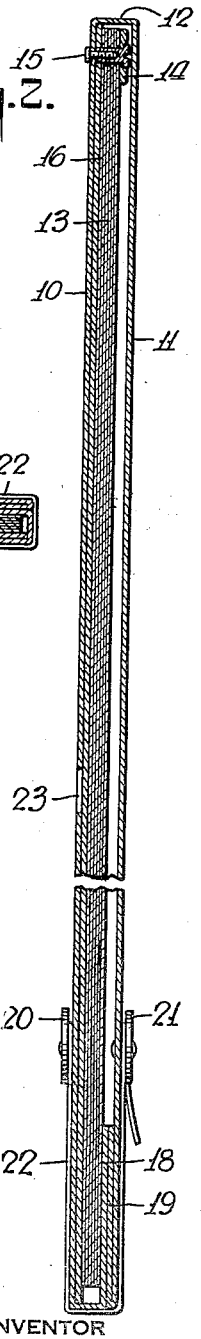

Fig. 3.

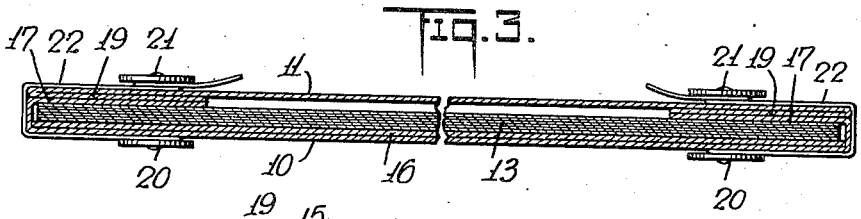

Fig. 4.

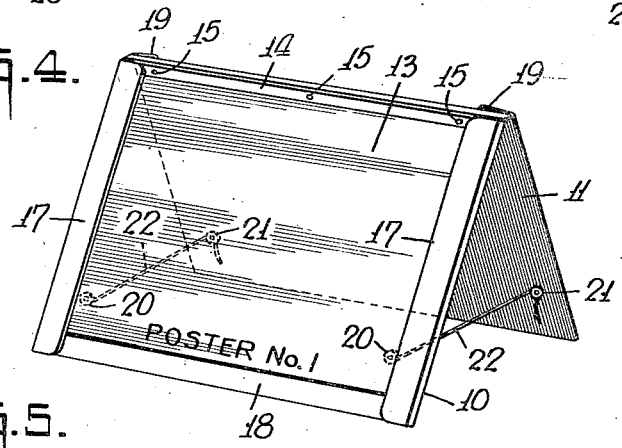

Fig. 5.

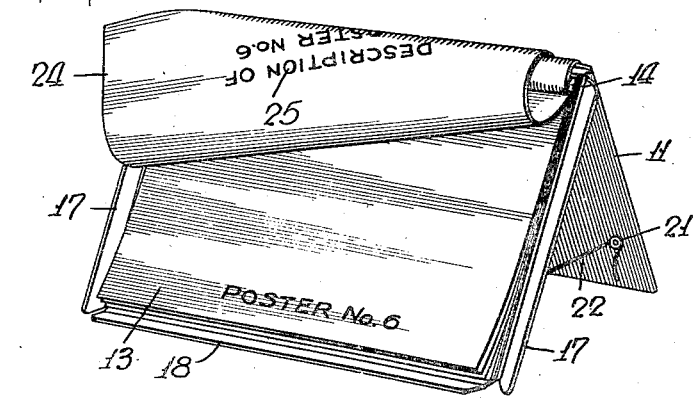

INVENTOR
John V. Horr
BY Bluck & Breitenfeld
ATTORNEYS