US005573711A

United States Patent [19]

Hou et al.

[11] **Patent Number: 5,573,711**

[45] **Date of Patent: Nov. 12, 1996**

[54] **PLANAR FLUORINATED DIELECTRIC SUSPENSIONS FOR ELECTROPHORETIC IMAGE DISPLAYS AND RELATED METHODS**

[75] Inventors: **Wei-Hsin Hou**, Holbrook; **Frederic E. Schubert**, Shoreham; **George Semertzidis**, Glen Head, all of N.Y.

[73] Assignee: **Copytele, Inc.**, Huntington Station, N.Y.

[21] Appl. No.: **561,091**

[22] Filed: **Nov. 21, 1995**

Related U.S. Application Data

[63] Continuation of Ser. No. 249,855, May 26, 1994.

[51] **Int. Cl.**[6] **H01B 3/22**; H01B 3/24

[52] **U.S. Cl.** **252/572**; 252/570; 106/311; 430/32

[58] **Field of Search** ..... 106/311; 252/570, 252/572; 204/600, 299 R

[56] **References Cited**

U.S. PATENT DOCUMENTS

3,612,758	10/1970	Evans	178/5.4 R
4,285,801	8/1981	Chiang	204/299 R
4,298,448	11/1981	Müller et al.	204/299
4,482,465	11/1984	Gray	252/67
4,655,897	4/1987	DiSanto	204/299 R
4,680,103	7/1987	Beilin Solomon I. et al.	204/299 R
4,732,830	3/1988	DiSanto	430/20
5,283,148	1/1994	Rao	430/114

Primary Examiner—Paul Lieberman
Assistant Examiner—Gregory R. Delcotto
Attorney, Agent, or Firm—Plevy & Associates

[57] **ABSTRACT**

A dielectric suspension for use in an electrophoretic image display, electrostatic printing or the like, comprising a suspension medium including a dense fluorinated solvent and a less dense hydrocarbon solvent, a plurality of pigment particles dispersed in the suspension medium, a fluid dye dissolved in the suspension medium for providing a contrast with the pigment particles, and a charge control agent adsorbed on the pigment particles for preventing the pigment particles from agglomerating.
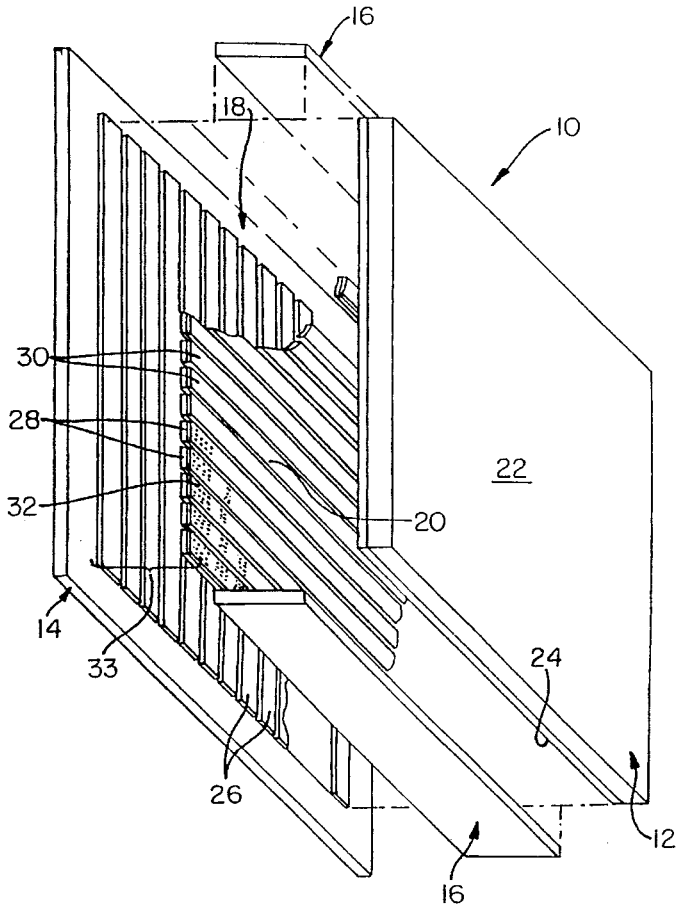
26 Claims, 2 Drawing Sheets