Dec. 15, 1953 M. F. DE BOY 2,663,011

CATHODE-RAY TUBE SUPPORT

Filed July 6, 1949

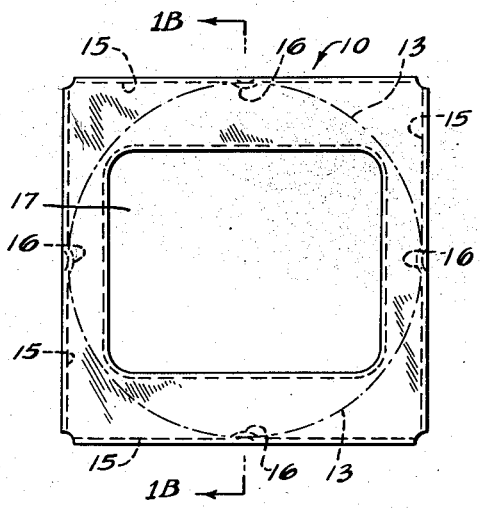

FIG. 1A

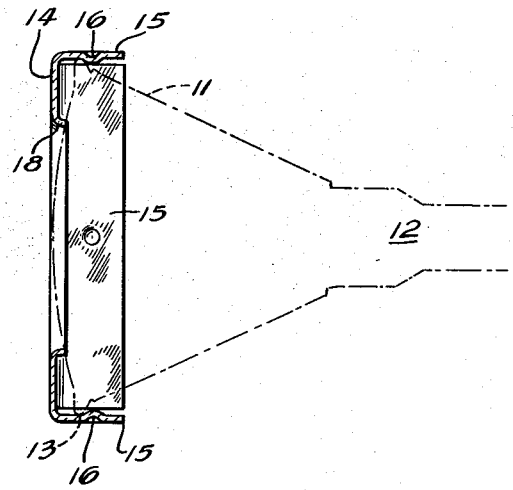

FIG. 1B

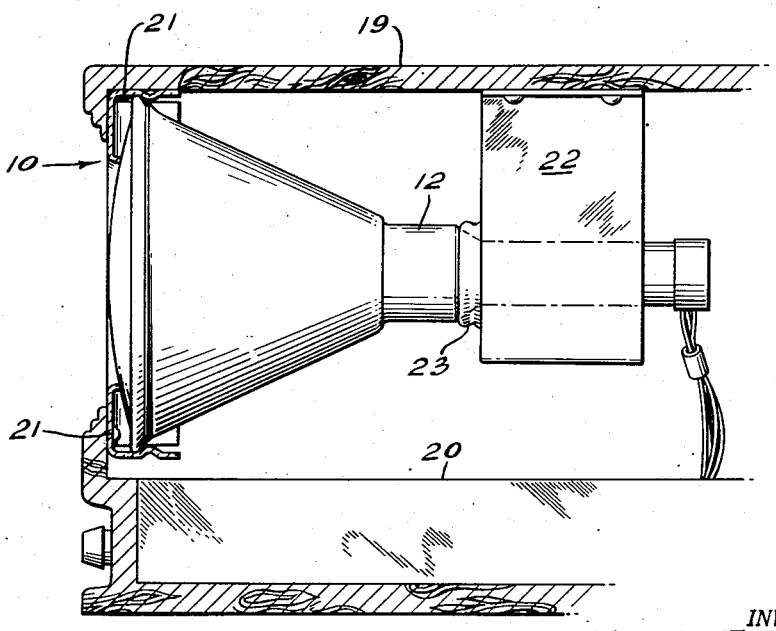

FIG. 2

INVENTOR.
Marvin F. DeBoy
BY John A. Harvey
ATTORNEY