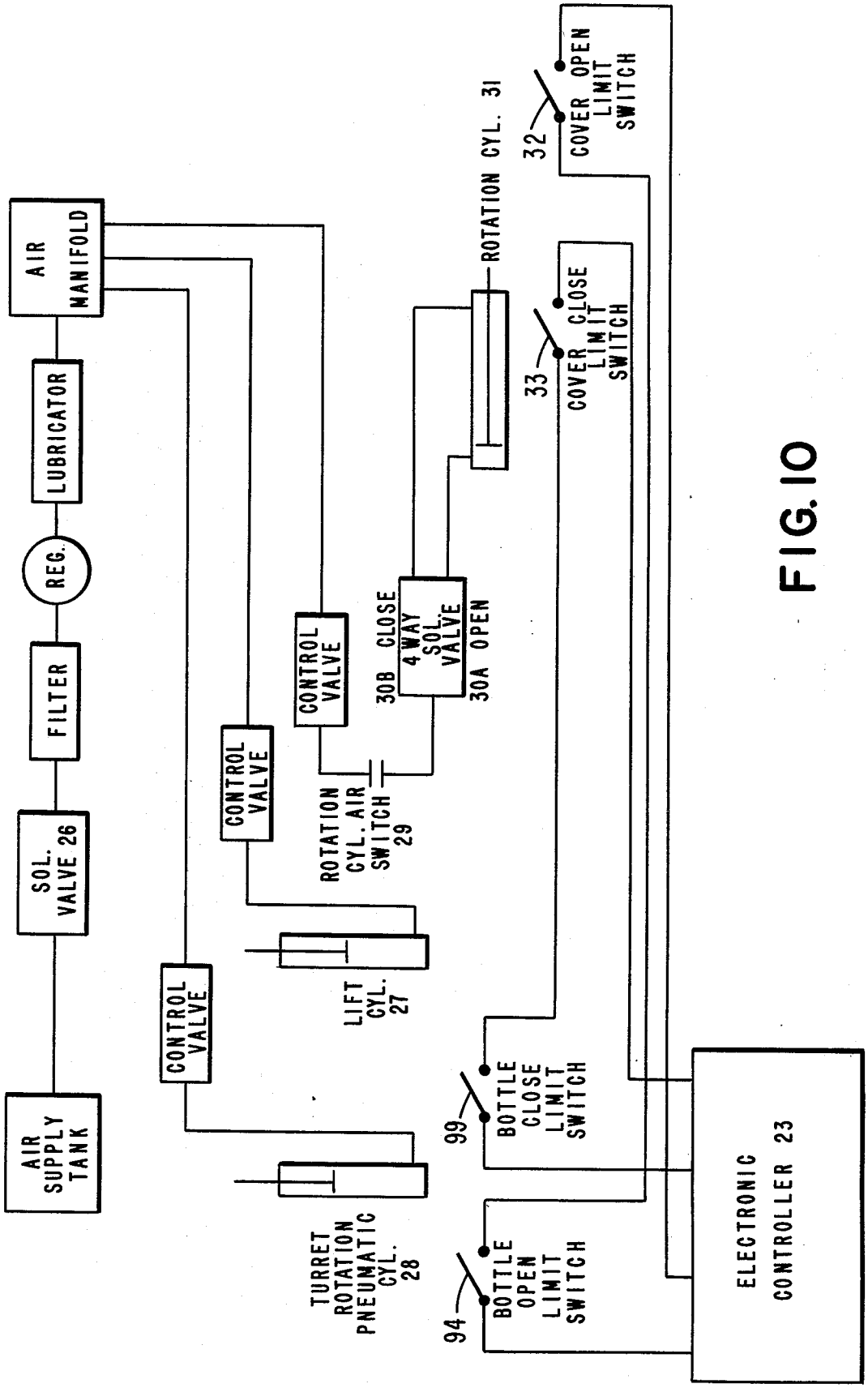
AIR SUPPLY TANK
SOL. VALVE 26
FILTER
REG.
LUBRICATOR
AIR MANIFOLD
CONTROL VALVE
CONTROL VALVE
CONTROL VALVE
TURRET ROTATION PNEUMATIC CYL. 28
LIFT CYL. 27
ROTATION CYL. AIR SWITCH 29
30B CLOSE
4 WAY SOL. VALVE
30A OPEN
ROTATION CYL. 31
94
BOTTLE OPEN LIMIT SWITCH
99
BOTTLE CLOSE LIMIT SWITCH
33
COVER CLOSE LIMIT SWITCH
32
COVER OPEN LIMIT SWITCH
ELECTRONIC CONTROLLER 23

FIG. 10