US009411211B2

(12) **United States Patent**
Ohara

(10) **Patent No.: US 9,411,211 B2**
(45) **Date of Patent: Aug. 9, 2016**

(54) **IMAGE CAPTURING APPARATUS AND IMAGING METHOD**

(71) Applicant: **CANON KABUSHIKI KAISHA**, Tokyo (JP)

(72) Inventor: **Naoyuki Ohara**, Machida (JP)

(73) Assignee: **Canon Kabushiki Kaisha**, Tokyo (JP)

(*) Notice: Subject to any disclaimer, the term of this patent is extended or adjusted under 35 U.S.C. 154(b) by 0 days.

(21) Appl. No.: **14/696,282**

(22) Filed: **Apr. 24, 2015**

(65) **Prior Publication Data**

US 2015/0319356 A1 Nov. 5, 2015

(30) **Foreign Application Priority Data**

Apr. 30, 2014 (JP) 2014-093891

(51) **Int. Cl.**

G03B 13/36	(2006.01)
H04N 5/232	(2006.01)
H04N 5/369	(2011.01)
G02B 7/34	(2006.01)

(52) **U.S. Cl.**

CPC ***G03B 13/36*** (2013.01); ***G02B 7/34*** (2013.01); ***H04N 5/232*** (2013.01); ***H04N 5/23212*** (2013.01); ***H04N 5/369*** (2013.01); ***H04N 5/3696*** (2013.01)

(58) **Field of Classification Search**

CPC ... H04N 5/23212; H04N 5/3696; G03B 13/36

See application file for complete search history.

(56) **References Cited**

U.S. PATENT DOCUMENTS

8,988,595	B2 *	3/2015	Kunieda	H04N 5/23212 348/222.1
2015/0296129	A1 *	10/2015	Ishikawa	H04N 5/3696 348/349
2016/0080634	A1 *	3/2016	Hamano	G02B 7/365 348/349

FOREIGN PATENT DOCUMENTS

JP	2001-305415 A	10/2001
JP	2010-271419 A	12/2010
JP	2013-072906 A	4/2013

* cited by examiner

Primary Examiner — Tuan Ho

(74) *Attorney, Agent, or Firm* — Canon USA Inc. IP Division

(57) **ABSTRACT**

An image capturing apparatus includes an image sensor having focus detection pixels arrayed in pixel lines, and controls a ratio of pixel line addition to signal correlation amount addition in a focus detection region in accordance with subject information to perform focus detection with increased resolution and suppressed noise based on an image signal of a subject slanting in relation to the focus detection region.
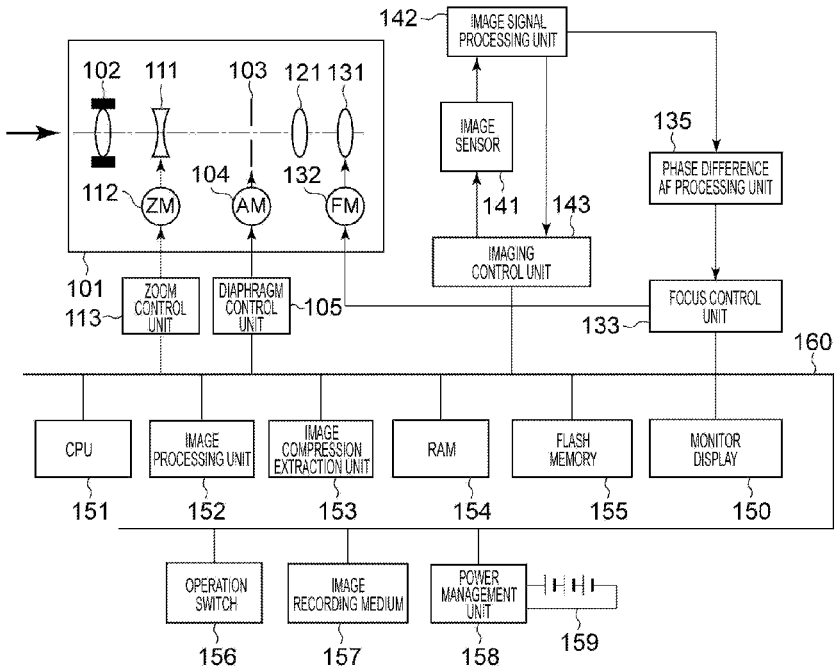
10 Claims, 13 Drawing Sheets