US009411111B2

(12) **United States Patent**
Banal, Jr. et al.

(10) **Patent No.: US 9,411,111 B2**
(45) **Date of Patent: Aug. 9, 2016**

(54) **PLUGGABLE OPTICAL CONNECTOR, LOCK AND RELEASE MECHANISM THEREFOR**

(71) Applicant: **SAE Magnetics (H.K.) Ltd.**, Hong Kong (HK)

(72) Inventors: **Margarito P. Banal, Jr.**, Hong Kong (HK); **Vincent Wai Hung**, Hong Kong (HK); **Francis Guillen Gamboa**, Hong Kong (HK)

(73) Assignee: **SAE Magnetics (H.K.) Ltd.**, Hong Kong (HK)

(*) Notice: Subject to any disclaimer, the term of this patent is extended or adjusted under 35 U.S.C. 154(b) by 0 days.

(21) Appl. No.: **14/564,136**

(22) Filed: **Dec. 9, 2014**

(65) **Prior Publication Data**

US 2016/0161681 A1 Jun. 9, 2016

(51) **Int. Cl.**
G02B 6/36 (2006.01)
G02B 6/38 (2006.01)

(52) **U.S. Cl.**
CPC ***G02B 6/3893*** (2013.01); ***G02B 6/3821*** (2013.01); ***G02B 6/3825*** (2013.01); ***G02B 6/3885*** (2013.01)

(58) **Field of Classification Search**
CPC G02B 6/36; G02B 6/38
USPC 385/76, 70
See application file for complete search history.

(56) **References Cited**

U.S. PATENT DOCUMENTS

6,412,986 B1 * 7/2002 Ngo G02B 6/3825 385/53
6,644,868 B2 * 11/2003 De Marchi G02B 6/3821 385/56
6,846,115 B1 * 1/2005 Shang H01R 12/7076 385/92
7,255,490 B2 8/2007 Zhang et al.
7,309,250 B2 12/2007 Reed et al.
7,507,111 B2 * 3/2009 Togami H01R 13/6275 385/88
8,545,252 B2 10/2013 Wang et al.
2001/0010741 A1 * 8/2001 Hizuka G02B 6/3825 385/55
2002/0150344 A1 * 10/2002 Chiu G02B 6/3825 385/53
2003/0012520 A1 * 1/2003 Rogge G02B 6/3825 385/88
2003/0206403 A1 * 11/2003 Zaremba G02B 6/4292 361/728
2003/0236019 A1 * 12/2003 Hanley G02B 6/4292 439/372
2004/0033027 A1 * 2/2004 Pang G02B 6/3825 385/53
2006/0027686 A1 * 2/2006 Taylor B01L 3/502 241/2
2009/0046981 A1 * 2/2009 Margolin G02B 6/3825 385/70
2010/0081303 A1 * 4/2010 Roth G02B 6/3817 439/140
2014/0134898 A1 5/2014 Wang et al.
2014/0254993 A1 * 9/2014 Koutrokois G02B 6/4261 385/92
2015/0038905 A1 * 2/2015 Andino A61F 9/0017 604/117
2015/0370025 A1 * 12/2015 Wells G02B 6/444 385/135

* cited by examiner

Primary Examiner — Kaveh C Kianni

(57) **ABSTRACT**

A pluggable optical connector with a lock and release mechanism having a slider. The slider includes a handle, two spaced apart longitudinal arms extending from the handle and along two opposite sidewalls of a housing of the connector, two wedges formed at two free ends of the two arms respectively for forcing two deflectable locking tabs formed on a cage outwards when the connector is plugged into the cage and locked therein, and a bridge extending between the two arms. A single transverse leaf spring is positioned between the bridge and a transverse vertical wall extending inwardly from the housing of the connector. The leaf spring exerts spring force in a longitudinal direction, and locking of the connector is released with a reverse movement of the connector countering the spring force.
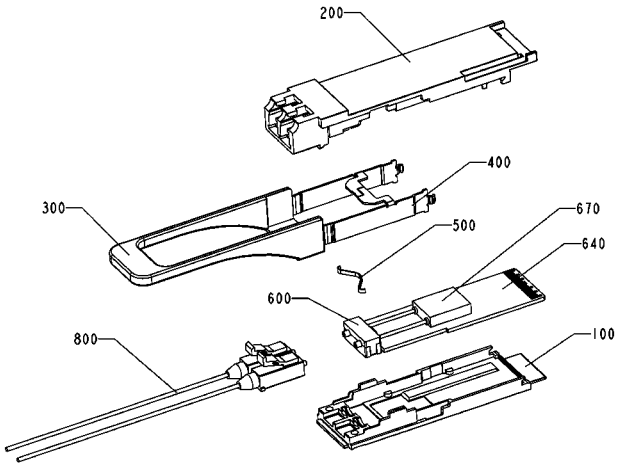
17 Claims, 13 Drawing Sheets