US009410811B2

(12) **United States Patent**
Pfaff et al.

(10) **Patent No.: US 9,410,811 B2**
(45) **Date of Patent: Aug. 9, 2016**

(54) **AUTOMATED GUIDED VEHICLE, SYSTEM COMPRISING A COMPUTER AND AN AUTOMATED GUIDED VEHICLE, METHOD OF PLANNING A VIRTUAL TRACK, AND METHOD OF OPERATING AN AUTOMATED GUIDED VEHICLE**

(71) Applicant: **KUKA Laboratories GmbH**, Augsburg (DE)

(72) Inventors: **Patrick Pfaff**, Augsburg (DE); **Bjorn Klein**, Friedberg (DE)

(73) Assignee: **KUKA Roboter GmbH**, Augsburg (DE)

(*) Notice: Subject to any disclaimer, the term of this patent is extended or adjusted under 35 U.S.C. 154(b) by 65 days.

(21) Appl. No.: **14/263,165**

(22) Filed: **Apr. 28, 2014**

(65) **Prior Publication Data**

US 2015/0285644 A1 Oct. 8, 2015

(30) **Foreign Application Priority Data**

Apr. 30, 2013 (DE) 10 2013 207 899

(51) **Int. Cl.**

G01C 22/00 (2006.01)
G01C 21/34 (2006.01)
B25J 9/16 (2006.01)
(Continued)

(52) **U.S. Cl.**

CPC ***G01C 21/34*** (2013.01); ***B25J 9/1664*** (2013.01); ***G01C 21/20*** (2013.01); ***G05D 1/0088*** (2013.01); ***G05D 1/0217*** (2013.01); ***G05D 1/0274*** (2013.01); ***G06Q 10/047*** (2013.01); *G05B 2219/31007* (2013.01); *G05B 2219/40298* (2013.01); *G05B 2219/40446* (2013.01); *G05D 2201/0216* (2013.01); *Y02P 90/285* (2015.11)

(58) **Field of Classification Search**

CPC . G05D 1/0217; G05D 1/0274; G05D 1/0088; G05D 2201/0216; G01C 21/34; G06Q 10/047
USPC 701/25, 23, 409, 438
See application file for complete search history.

(56) **References Cited**

U.S. PATENT DOCUMENTS

2005/0256639 A1* 11/2005 Aleksic et al. 701/210
2006/0149465 A1 7/2006 Park et al.
(Continued)

FOREIGN PATENT DOCUMENTS

DE 69415067 T2 7/1999
DE 102010012750 A1 9/2011
(Continued)

OTHER PUBLICATIONS

German Patent Office; Search Report in German Patent Application No. 10 2013 207 899.4 dated Mar. 26, 2014; 5 pages.
(Continued)

Primary Examiner — Gertrude Arthur Jeanglaud
(74) *Attorney, Agent, or Firm* — Wood, Herron & Evans, LLP

(57) **ABSTRACT**

The invention relates to an automated guided vehicle, a system with a computer and an automated guided vehicle, a method of planning a virtual track and a method of operating an automated guided vehicle. The automated guided vehicle is to move automatically along a virtual track within an environment from a start point to an end point. The environment comprises sections connecting the start point the end point, and the intermediate point. A graph is assigned to the environment.
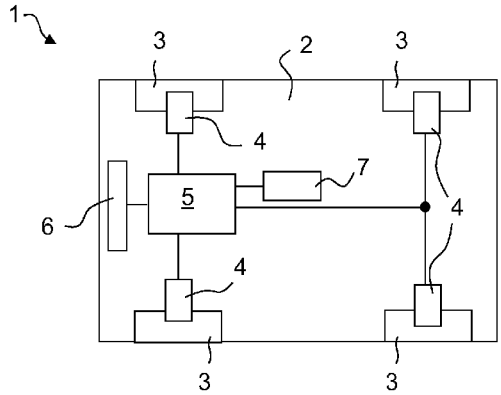
11 Claims, 6 Drawing Sheets