US009410511B2

(12) **United States Patent**
Nam et al.

(10) **Patent No.: US 9,410,511 B2**
(45) **Date of Patent: Aug. 9, 2016**

(54) **VARIABLE INTAKE SYSTEM FOR VEHICLE**

(71) Applicant: **Hyundai Motor Company**, Seoul (KR)

(72) Inventors: **Jong Woo Nam**, Whasung-Si (KR); **Hyun Cho**, Whasung-Si (KR); **Joonho Lee**, Whasung-Si (KR); **Hanshin Chung**, Whasung-Si (KR)

(73) Assignee: **Hyundai Motor Company**, Seoul (KR)

(*) Notice: Subject to any disclaimer, the term of this patent is extended or adjusted under 35 U.S.C. 154(b) by 81 days.

(21) Appl. No.: **14/444,588**

(22) Filed: **Jul. 28, 2014**

(65) **Prior Publication Data**

US 2015/0144088 A1 May 28, 2015

(30) **Foreign Application Priority Data**

Nov. 26, 2013 (KR) 10-2013-0144768

(51) **Int. Cl.**

H01M 2/12	(2006.01)
F02M 35/10	(2006.01)
F02M 35/12	(2006.01)
B60K 13/02	(2006.01)
F02M 35/14	(2006.01)
F02M 31/16	(2006.01)

(52) **U.S. Cl.**

CPC ***F02M 35/10255*** (2013.01); ***B60K 13/02*** (2013.01); ***F02M 31/16*** (2013.01); ***F02M 35/10013*** (2013.01); ***F02M 35/10249*** (2013.01); ***F02M 35/10268*** (2013.01); ***F02M 35/1255*** (2013.01); ***F02M 35/14*** (2013.01); *Y02T 10/126* (2013.01)

(58) **Field of Classification Search**

CPC F02M 35/10255; F02M 35/10268; F02M 35/1255; F02M 35/10249; F02M 35/14; F02M 35/10013; F02M 31/16; B60K 13/02

USPC 123/184.21, 184.57

See application file for complete search history.

(56) **References Cited**

U.S. PATENT DOCUMENTS

8,820,455	B2 *	9/2014	Nitawaki et al.	180/68.5
2004/0112325	A1 *	6/2004	Criddle et al.	123/198 E
2006/0204840	A1 *	9/2006	Jeon et al.	429/152
2013/0143082	A1 *	6/2013	Kim	429/82

FOREIGN PATENT DOCUMENTS

JP	9-174669	A	7/1997
JP	2009-238697	A	10/2009
KR	10-2013-0033579	A	4/2013

* cited by examiner

Primary Examiner — Marguerite McMahon

(74) *Attorney, Agent, or Firm* — Morgan, Lewis & Bockius LLP

(57) **ABSTRACT**

A variable intake system for a vehicle to regulate an amount of intake air according to driving conditions of an engine may include an air cleaner connected to an intake duct which draws in intake air and forms a flow path for the intake air inside the air cleaner, a battery assembly installed in the flow path inside the air cleaner, which includes a plurality of cooling paths that allow the intake air to flow through the plurality of cooling paths, and a valve body installed in the air cleaner and selectively varying the flow path of the intake air.
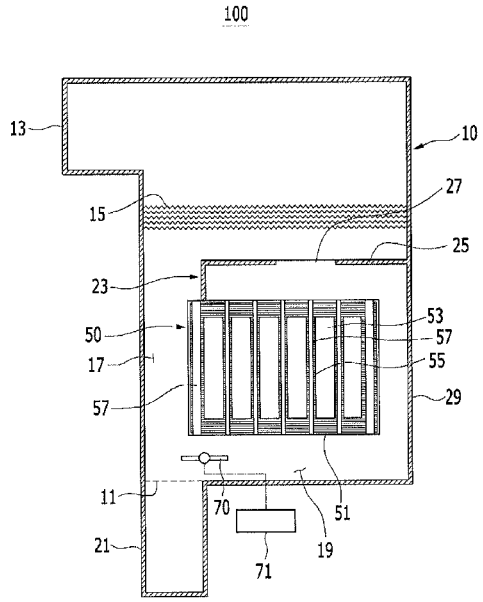
16 Claims, 7 Drawing Sheets