US009408611B1

(12) **United States Patent**
Pancholy et al.

(10) **Patent No.: US 9,408,611 B1**
(45) **Date of Patent: *Aug. 9, 2016**

(54) **APPARATUS AND METHOD TO STOP BLEEDING**

(71) Applicants: **Samir Bipin Pancholy**, Clarks Summit, PA (US); **Nolan Rajendra Sardesai**, Arcadia, CA (US); **Milind Padmakar Panse**, Riverside, CA (US); **Rajendra Gurudas Sardesai**, Arcadia, CA (US)

(72) Inventors: **Samir Bipin Pancholy**, Clarks Summit, PA (US); **Nolan Rajendra Sardesai**, Arcadia, CA (US); **Milind Padmakar Panse**, Riverside, CA (US); **Rajendra Gurudas Sardesai**, Arcadia, CA (US)

(73) Assignee: **VASOINNOVATIONS, INC.**, South Pasadena, CA (US)

(*) Notice: Subject to any disclaimer, the term of this patent is extended or adjusted under 35 U.S.C. 154(b) by 0 days.

This patent is subject to a terminal disclaimer.

(21) Appl. No.: **15/093,739**

(22) Filed: **Apr. 8, 2016**

Related U.S. Application Data

(63) Continuation of application No. 14/819,383, filed on Aug. 5, 2015, now Pat. No. 9,332,994.

(51) **Int. Cl.**
A61B 17/00 (2006.01)
A61B 17/132 (2006.01)
A61B 17/135 (2006.01)

(52) **U.S. Cl.**
CPC ***A61B 17/1325*** (2013.01); ***A61B 17/135*** (2013.01)

(58) **Field of Classification Search**
CPC A61B 17/1325; A61B 17/135; A61B 17/132; A61B 17/1322; A61B 2017/00902; A61B 2017/120034; A61F 2013/00829
USPC 606/201–203; 601/132, 151, 33, 40
See application file for complete search history.

(56) **References Cited**

U.S. PATENT DOCUMENTS

37,156	A	12/1862	Dunton
3,905,361	A	9/1975	Hewson et al.
4,863,429	A	9/1989	Baldwin
4,920,971	A	5/1990	Blessinger

(Continued)

FOREIGN PATENT DOCUMENTS

EP	0 601 756	A1	6/1994
WO	WO 97/02783	A1	1/1997

OTHER PUBLICATIONS

Samir Pancholy, et al, "Prevention of Radial Artery Occlusion—Patent Hemostasis Evaluation Trial (Prophet study)" Catheterization and Cardiovascular Interv 72:335-340 (2008).

(Continued)

Primary Examiner — Sarah W Aleman
Assistant Examiner — Socrates L Boutsikaris
(74) *Attorney, Agent, or Firm* — Rajendra Sardesai

(57) **ABSTRACT**

A hemostatic device is provided to stop bleeding at a puncture site on the wrist of a patient, the device comprising a transparent flexible band to be wrapped at the site where the bleeding is to be stopped, a curved frame having an inner peripheral side and possessing a first curved portion in its first half and a second curved portion in its second half, a first balloon provided on the inner peripheral side in the first half of the curved frame and a second balloon provided on the inner peripheral side in the second half of the curved frame, the first balloon being larger than the second balloon. The bleeding from radial artery is stopped by compressing the radial artery at the puncture site using inflation of the first balloon and radial artery flow is increased by compression of ipsilateral ulnar artery using inflation of the second balloon.
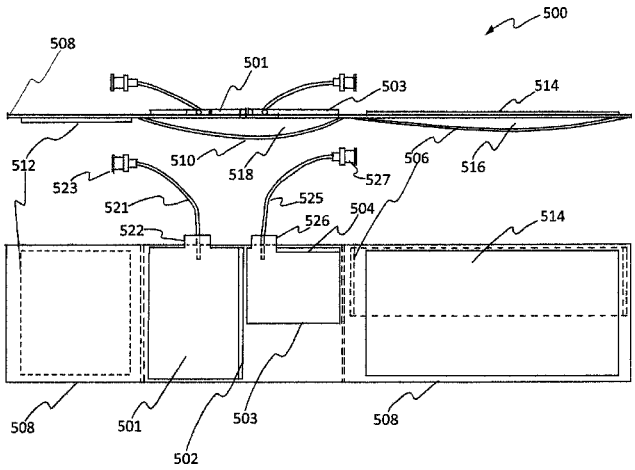
30 Claims, 9 Drawing Sheets