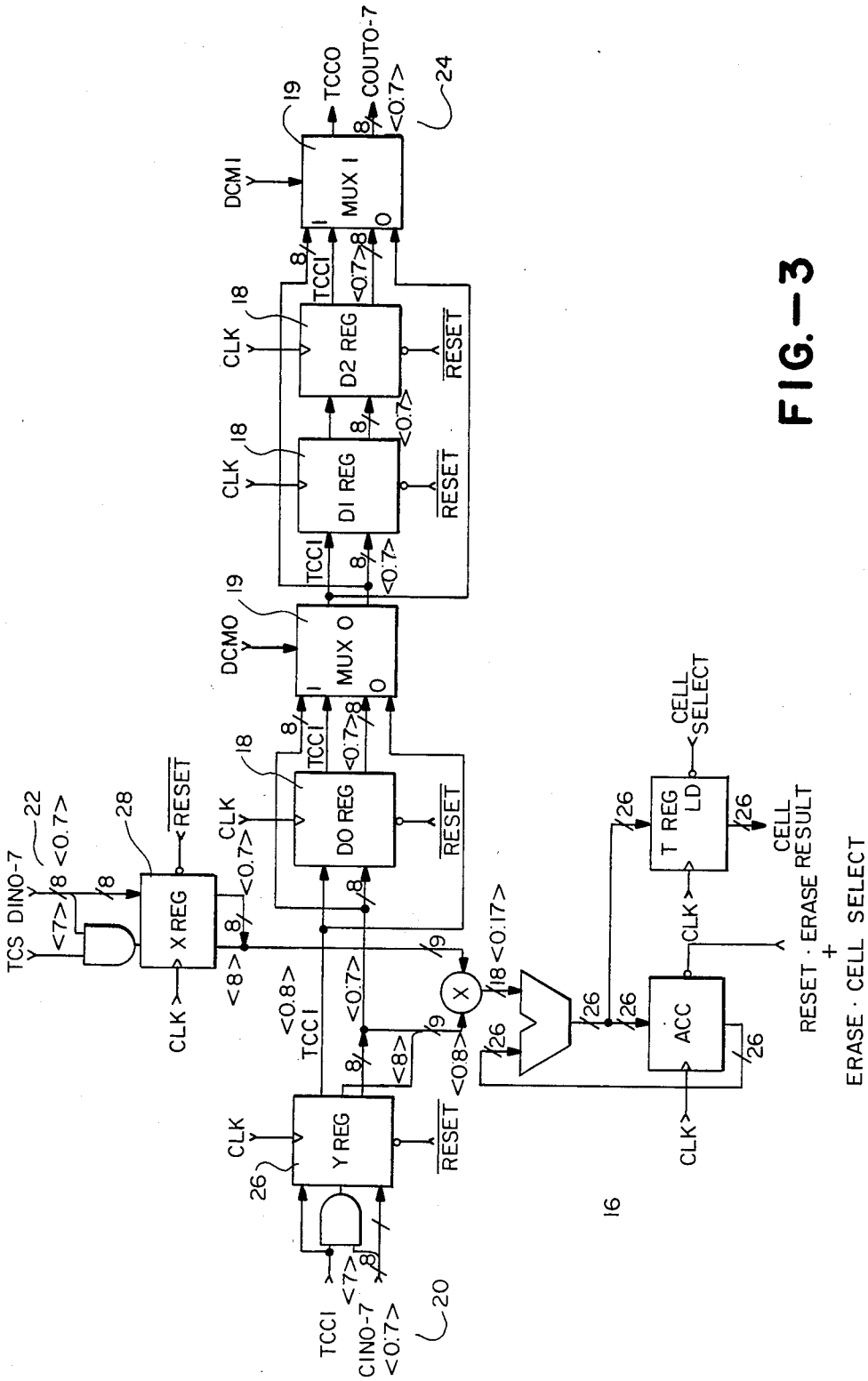
TCS DINO-7
<7>
<0.7>
22
28
X REG
RESET
CLK
<8>
<0.8>
TCCI
<0.7>
Y REG
26
CLK
RESET
TCCI
CINO-7
<0.7>
20
DO REG
18
TCCI
<0.7>
DCMO
MUX O
19
DI REG
18
CLK
RESET
D2 REG
18
TCCI
<0.7>
DCMI
MUX I
19
TCCO
COUTO-7
<0.7>
24
<0.17>
X
ACC
26
T REG
LD
CELL SELECT
CELL RESULT
RESET · ERASE
+
ERASE · CELL SELECT
16

FIG.—3