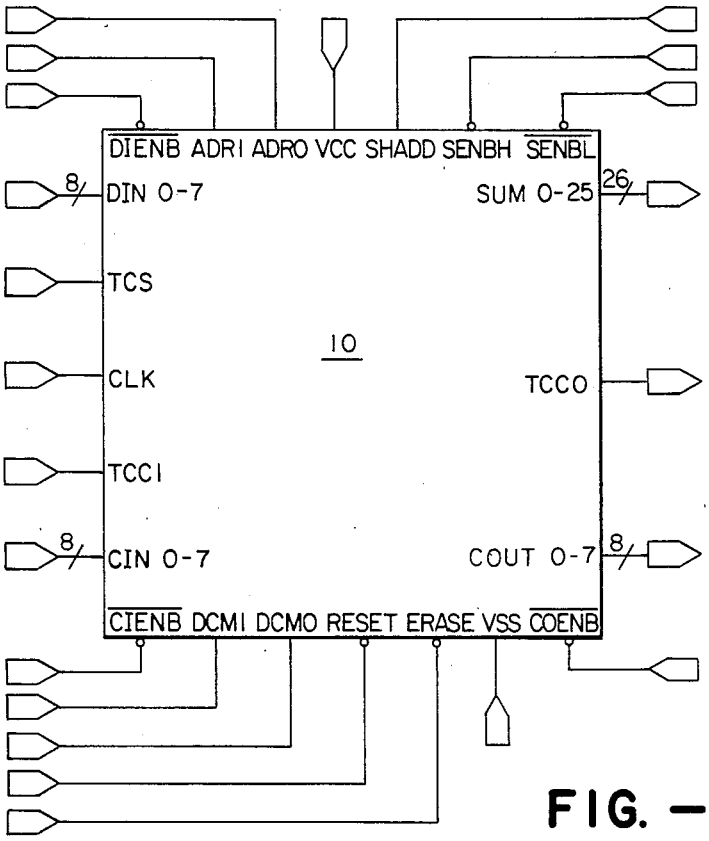
DIENB ADRI ADRO VCC SHADD SENBH SENBL
DIN 0-7
SUM 0-25
TCS
10
CLK
TCCO
TCCI
CIN 0-7
COUT 0-7
CIENB DCMI DCMO RESET ERASE VSS COENB

FIG. — 1

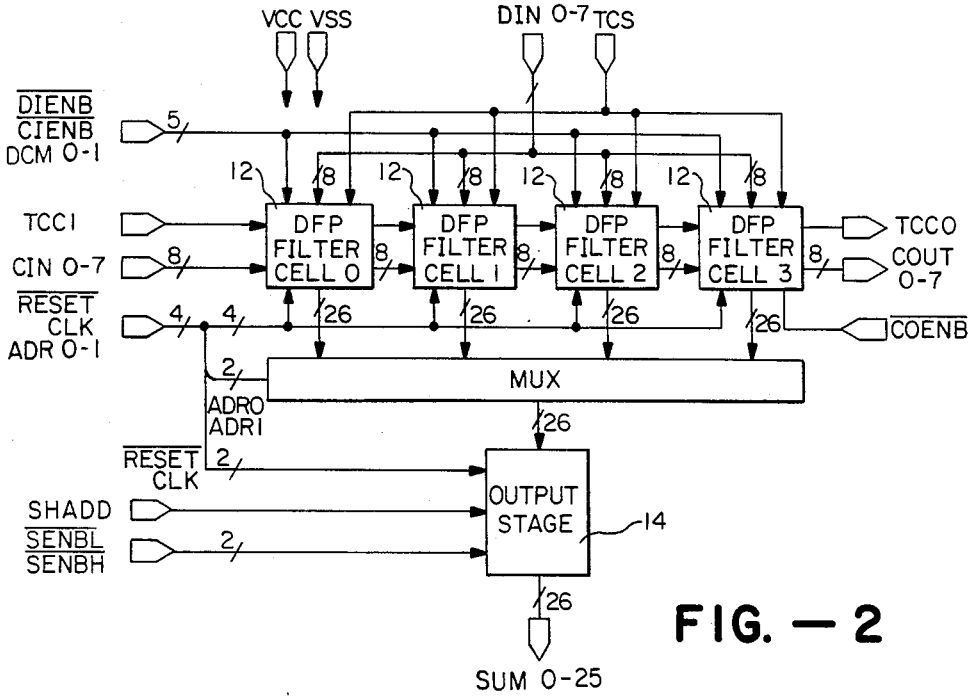
VCC VSS
DIN 0-7 TCS
DIENB
CIENB
DCM 0-1
TCCI
CIN 0-7
RESET
CLK
ADR 0-1
DFP FILTER CELL 0
DFP FILTER CELL 1
DFP FILTER CELL 2
DFP FILTER CELL 3
TCCO
COUT 0-7
COENB
MUX
ADRO
ADRI
RESET
CLK
SHADD
SENBL
SENBH
OUTPUT STAGE
14
SUM 0-25

FIG. — 2