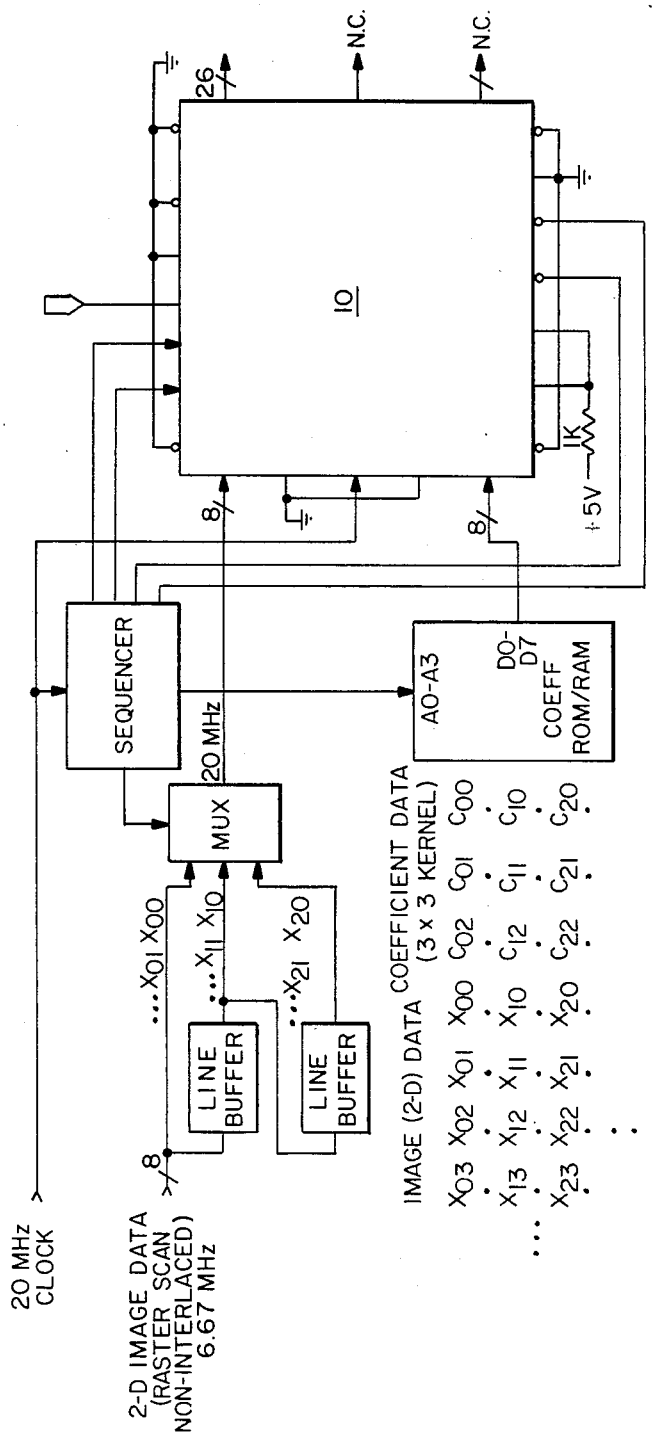

$$Y_{11} = C_{00}X_{00} + C_{10}X_{10} + C_{20}X_{20} + C_{01}X_{01} + C_{11}X_{11} + C_{21}X_{21} + C_{02}X_{02} + C_{12}X_{12} + C_{22}X_{22}$$

$$Y_{12} = C_{00}X_{01} + C_{10}X_{11} + C_{20}X_{21} + C_{01}X_{02} + C_{11}X_{12} + C_{21}X_{22} + C_{02}X_{03} + C_{12}X_{13} + C_{22}X_{23}$$

FIG. — 16